globalgastroparts.com - szervizaruhaz.h

Ersatzteillisten
Listes des pièces de rechange
Liste dei pezzi di ricambio
Spare parts lists

HERD PROGRAMM ELEKTR.
GAMME DES FOURNEAUX ELECTR.
PROGRAMME DI CUCINE ELECTR.
RANGE PROGRAM ELECTR.

Electr.
STARLINE LARGE

04.95/DE, FR, IT, GB 72.3090 (13)

globalgastroparts.com - szervizaruhaz.hu

DE	FR	IT	GB	
Baugruppe	**Unité**	**Unità**	**Unit**	
Gestell	Cadre	Telaio	Frame	72.3090.01
Gestell Brücke	Cadre pont	Telaio ponte	Frame bridge	72.3090.02
Gestell Wand	Cadre mur	Telaio muro	Frame wall	72.3090.03
Bodenplatte	Plaque de fond	Placce del suolo	Base plate	72.3090.04
MS Platten 2, 4	Plaques MS 2, 4	Piastra MS 2, 4	MS plates 2, 4	72.3090.12
MS Platten 6	Plaques MS 6	Piastra MS 6	MS plates 6	72.3090.13
MS Schublade	Tiroir MS	Cassetto MS	MS drawer	72.3090.14
Schublade Marine ALEX/EMS	Tiroir Marine ALEX/EMS	Cassetto Marine ALEX/EMS	Drawer Marine ALEX/EMS	72.3090.16
Glaskeramik	Vitrocéramique	Ceramica di vetro	Glas ceramic	72.3090.20
Topferkennung	Reperage marmite	Riconoscimento pentola	Pot recognition	72.3090.21
Grill/Griddle/Bratplatten	Gril/griller/rôtir plaques	Fry tops	Grill/griddle/roast. plates	72.3090.25
Bain Marie	Bain-marie	Bagnomaria	Bain marie	72.3090.30
Mischbatterie	Mitigeur	Batteria erogazione acqua	Mixing unit	72.3090.32
Backofen elt	Four electrique	Forno electr.	Oven electr.	72.3090.35
Backofen Tür	Four port	Forno porte	Oven door	72.3090.36
Backofen Einbau	Four installation	Forno installazione	Oven installation	72.3090.37
Backofen Blende	Four bandeau	Forno copertura	Oven panel	72.3090.39
Abstellraum klein	Compartiment pet.	Spazio pic.	Compartment sml.	72.3090.65
Abstellraum gross	Compartiment grd.	Spacio grand.	Compartment larg.	72.3090.70
Wärmeschrank	Armoire chauff.	Armadio riscald.	Hot cabinet	72.3090.75
Wärmeschrank hygienisch	Armoire chauff. hygiénique	Armadio riscald. igienico	Hot cabinet hygienic	72.3090.76
Wärmeschrank	Armoire chauff.	Armadio riscald.	Hot cabinet	72.3090.78
Wärmeschrank hygienisch	Armoire chauff. hygiénique	Armadio riscald. igienico	Hot cabinet hygienic	72.3090.79
Wärmeschrank	Armoire chauff.	Armadio riscald.	Hot cabinet	72.3090.80
Wärmeschrank	Armoire chauff.	Armadio riscald.	Hot cabinet	72.3090.85
Wärmeschrank hygienisch	Armoire chauff. hygiénique	Armadio riscald. igienico	Hot cabinet hygienic	72.3090.86
Wärmeplatte/Oberteil	Plaque chauff./ p. supérior.	Piastra riscald./ p. superio.	Hotplate/ upper part	72.3090.88
Wärmeplatte/Gestell	Plaque chauffante/ cadre	Piastra riscaldante/ telaio	Hotplate/ frame	72.3090.89
Wärmeschrank Blende	Armoire bandeau	Armadio copertura	Hot cabinet panel	72.3090.90
Schiene	Rail	Stecca	Rail	72.3090.92
Herdstange	Tablette	Corrimano	Rod	72.3090.94
Schlingerstange	Barre de fixation	Ripiano	Rolling rack	72.3090.95
Klapptablar	Console	Asta antirollio	Shelf	72.3090.96
Lampe Frontblende	Lampe Tôle frontale	Lampada Lamiera frontale	Lamp Front panel	72.3090.97
Steckdose	Prise	Presa di corrente	Socket	72.3090.98
Frontblende, Oberbau	Tôle frontale, supérieure	Lamiera frontale, superior	Front panel, upper part	72.3090.99
Frontblende Oberbau, Marine	Tôle frontale supérieure, Marine	Lamiera frontale superior, Marine	Front panel upper part, Marine	72.3090.100
Blende	Bandeau	Copertura	Filler	72.3090.200
Schild	Plaquette	Placchetta	Label	72.3090.250
Einzelkochplatte	Plaque individuelle	Piastra monopentola	Individual plate	72.3090.260

globalgastroparts.com - szervizaruhaz.hu

	spiegazione	explanation
STARLINE LARGE/ THERMALINE 900	profondità dell'apparecchio 900	appliance depth 900 mm
STARLINE COMPACT/ THERMALINE 800	profondità dell'apparecchio 800	appliance depth 800 mm
H = 800 mm	altezza netta dell'apparecchio	appliance hight net
H = 700 mm	altezza netta dell'apparecchio	appliance hight net
H = 400 mm	altezza netta dell'apparecchio	appliance hight net
H	altezza	height
B	larghezza	width
T	profondità	depth
Abmessung	dimensione	dimension
148, 158, 248, 258		
159, 249, 259, 359, 459	primi 3 numeri del tipo di apparecchio	first 3 numbers of appliance's type
Produkt Nr. ab.cdef.XX	numero di produzione	number for fabrication
Service Nr.	numero per servizio d'assistenza	number for aftersales
Marine	solo per apparecchi di marina	only for Marine ranges
	comando da un lato comando da due lati	operated from one side operated from both sides
MS(E)82 158 MS(E)84 248 MS(E)92 159 MS(E)94 259 MS(E)94 + MS(E)52 359	piastra tutta superficie	large cooking plate
Introduction = Introd.	data d'introduzione mese/anno	date of introduction month/year

globalgastroparts.com - szervizaruhaz.hu

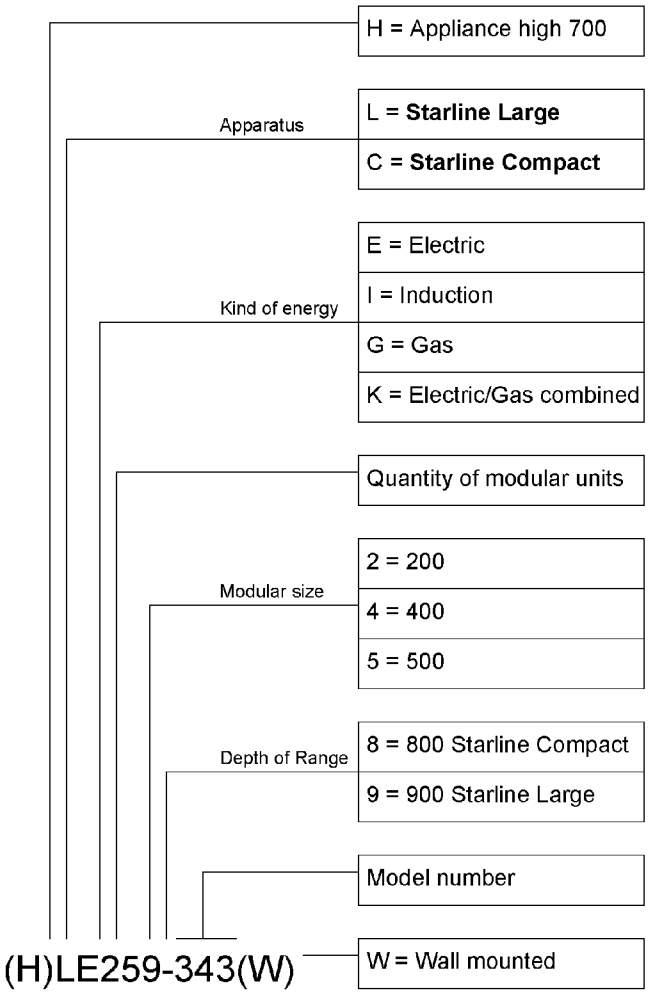

Standard equipment of the substructures

Roasting oven	:	with 1 baking sheet and 1 bar grate GN2/1 each
Open compartement GN1/1	:	with 5 pairs of mounting brackets, without shelves
Open compartement GN2/1	:	with 5 pairs of mounting brackets, without shelves
Other open compartmentes	:	with shelf slide rails, without shelves
Hot cupboards GN1/1	:	with 5 pairs of mounting brackets, without shelves
Hot cupboards GN2/1	:	with 5 pairs of mounting brackets, without shelves
Other hot cupboards	:	with 1 adjustable shelf

Details for ordering Model numbers in this list describe units without plinth and without protection bar

1. Model number for a cooking bank describe units from left to right like the following example: eg. LK259-727/LE159-317/etc.

2. Plinth — Allready existing concrete or brick base
   M20 for appliance high 900mm
   M10 for appliance high 900mm
   M5 for appliance high 850mm

   Feet — 200mm for appliance high 900mm

3. Protection bars — V10-10 front 115mm
   V20-in front 200mm
   H10-at rear 115mm
   H20-at rear 200mm

4. Positioning — Free standing, against a wall or back-to-back

5. Wall connection — Behind, left, rigt, with skirting
   Look at page 24

6. Voltage — Standard voltage 400V/3N~ ; 50Hz

7. Gas — Natural or liquid gas

8. Accessories

globalgastroparts.com - szervizerdb.hu

Compact 72.3780.01
Large 72.3090.01
23.09.94

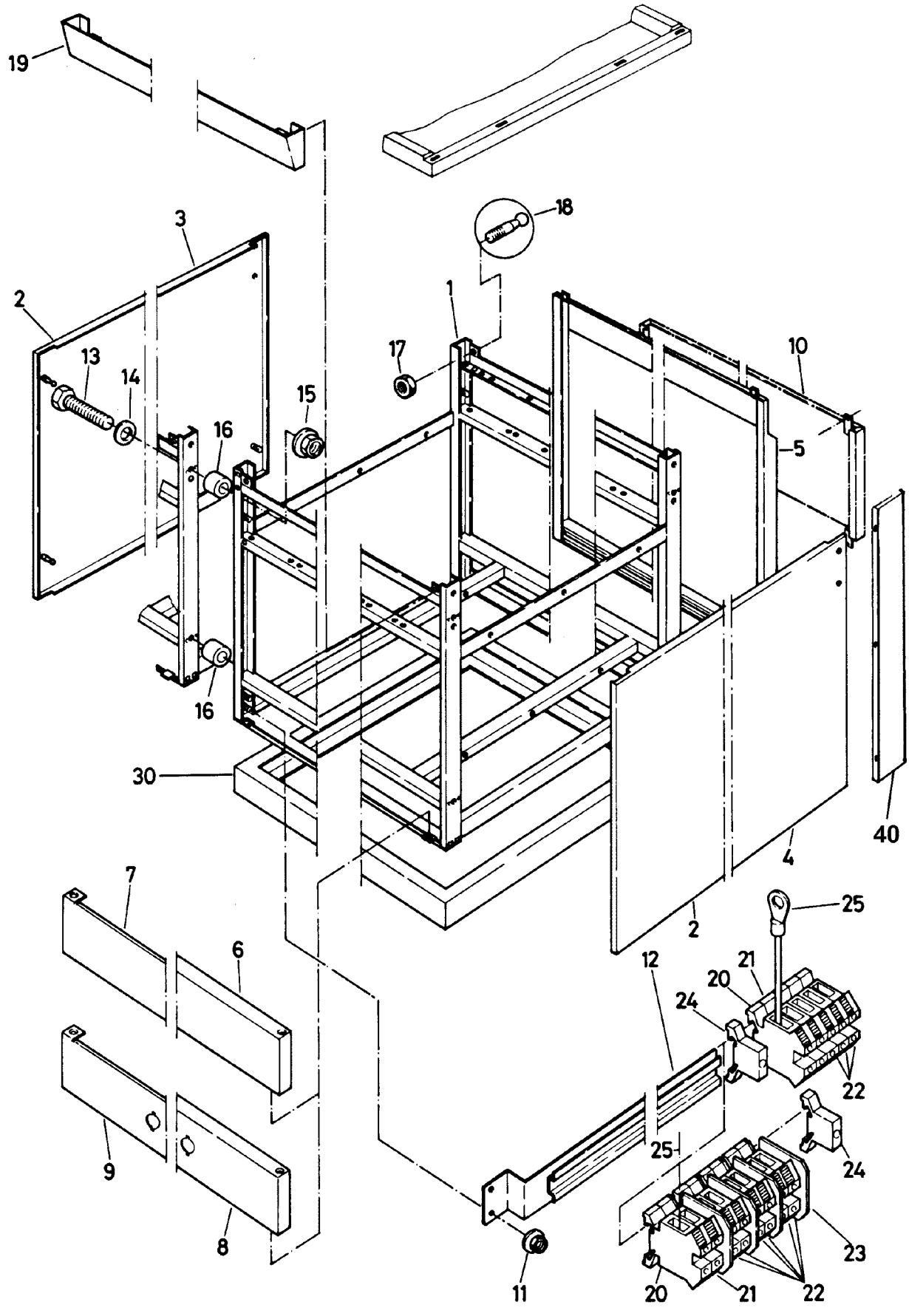

globalgastroparts.com - szervizaruhaz.hu

			unità	unit			Large 72.3090.01	
	H=800 mm		telaio	frame				1
			fissaggio del suolo	bottom fixation				10.4.1995
Pos.	Produkt Nr.	Service Nr.	designatione	designation	159	249	259	359
1	72.2030		telaio	frame	1			
	72.3349		telaio	frame		1		
	72.2038.01		telaio normale	frame standard			1	
	72.2038.02		telaio con copertura continuata destra	frame with continuous cover right			1	
	72.2038.03		telaio con copertura continuata sinistra	frame with continuous cover left			1	
	72.2038.04		telaio con copertura continuata destra 2 zone di cottura a gas sinistra	frame with continuous cover right 2 gas cooking zones left			1	
	72.2038.05		telaio con copertura continuata destra 2 zone di cottura a gas destra	frame with continuous cover right 2 gas cooking zones right			1	
	72.2038.06		telaio per 2 zone di cottura a gas sinistra	frame for 2 gas cooking zones left			1	
	72.2038.07		telaio per 2 zone di cottura a gas destra	frame for 2 gas cooking zones right			1	
	72.2243.01		telaio normale	frame standard				1
	72.2243.02		telaio 2 zone di cottura a gas sinistra	frame 2 gas cooking zones left				1
	72.2243.02		telaio 2 zone di cottura a gas destra	frame 2 gas cooking zones right				1

globalgastroparts.com - szervizaruhaz.hu

			Baugruppe	unité	unità	unit		Large 72.3090.01		
	H=800 mm		Gestell	cadre	telaio	frame				2
			Bodenbefestigung	fixation de sol	fissaggio del suolo	bottom fixation			10.4.1995	
Pos.	Produkt Nr.	Service Nr.	Bezeichnung	désignation	designatione	designation	159	249	259	359
1	72.2766	Induction	Gestell	cadre	telaio	frame	1			
	72.2772.01	Induction	Gestell normal	cadre normal	telaio normale	frame standard			1	
	72.2772.02	Induction	Gestell mit durchgehender Abdeckung rechts	cadre avec couvercle continu droit	telaio con copertura continuata destra	frame with continuous cover right			1	
	72.2772.02	Induction	Gestell mit durchgehender Abdeckung links	cadre avec couvercle continu gauche	telaio con copertura continuata sinistra	frame with continuous cover left			1	
2	72.2426		Seitenwand	paroi latérale	parete laterale	side panel	2	2	2	2
3	72.2432		Seitenwand links für Klapptablar	paroi latérale gauche pour console	parete laterale sinistra per ripiano	side panel left for shelf	1	1	1	1
4	72.2433		Seitenwand rechts für Klapptablar	paroi latérale droite pour console	parete laterale destra per ripiano	side panel right for shelf	1	1	1	1
5	72.3765		Rückwand	paroi arrière	parete posteriore	rear panel	1			
	72.3766		Rückwand	paroi arrière	parete posteriore	rear panel		1		
	72.3710		Rückwand	paroi arrière	parete posteriore	rear panel			1	
	72.3767		Rückwand	paroi arrière	parete posteriore	rear panel				1
6	72.2068		Anschlussdeckel	couvercle de raccord	coperchio di raccordo	connection cover	1			
	72.2394		Anschlussdeckel	couvercle de raccord	coperchio di raccordo	connection cover		1		
	72.2069		Anschlussdeckel	couvercle de raccord	coperchio di raccordo	connection cover			1	
	72.2328		Anschlussdeckel	couvercle de raccord	coperchio di raccordo	connection cover				1
7	72.2449		Anschlussdeckel Schiebetüre	couvercle de raccord porte coulissante	coperchio di raccordo porta glissante	connection cover sliding door			1	
	72.3233		Anschlussdeckel Schiebetüre	couvercle de raccord porte coulissante	coperchio di raccordo porta glissante	connection cover sliding door				1

globalgastroparts.com - szervizaruhaz.hu

	H=800 mm		unità telaio fissaggio del suolo	unit frame bottom fixation		Large 72.3090.01 3 10.4.1995		
Pos.	Produkt Nr.	Service Nr.	designatione	designation	159	249	259	359
8	72.2398		coperchio di raccordo gas destra	connection cover gas right	1			
	72.2384		coperchio di raccordo gas destra	connection cover gas right		1		
	72.2372		coperchio di raccordo gas sinistra	connection cover gas left			1	
	72.2371		coperchio di raccordo gas destra	connection cover gas right			1	
	72.2370		coperchio di raccordo gas sinistra	connection cover gas left				1
	72.2369		coperchio di raccordo gas destra	connection cover gas right				1
	72.5389	HS	coperchio di raccordo	connection cover	1			
	72.3800	HS	coperchio di raccordo	connection cover			1	
	72.5350	IN/BO	coperchio di raccordo	connection cover			1	
	72.5338	GFI	coperchio di raccordo	connection cover			1	
	72.4740	HS-L	coperchio di raccordo gas destra	connection cover gas right	1			
	72.6335	HS-L	coperchio di raccordo gas destra	connection cover gas right			1	
	72.5840	HS-R	coperchio di raccordo gas sinistra	connection cover gas left			1	
	72.5393	HS	coperchio di raccordo	connection cover				1
	72.6339	HS-L	coperchio di raccordo gas destra	connection cover gas right				1
	72.6337	HS-R	coperchio di raccordo gas sinistra	connection cover gas left				1
	72.3378	BO+BO	coperchio di raccordo	connection cover				1
	72.3378	BO+BO	coperchio di raccordo gas sinistra	connection cover gas left				1
	72.3380	BO+BO	coperchio di raccordo gas destra	connection cover gas right				1

globalgastroparts.com - szervizaruhaz.hu

			unità	unit			Large 72.3090.01	
	H=800 mm		telaio	frame				4
			fissaggio del suolo	bottom fixation			10.4.1995	
Pos.	Produkt Nr.	Service Nr.	designatione	designation	159	249	259	359
9	72.2889		coperchio di raccordo gas sinistra porta glissante	connection cover gas left sliding door			1	
	72.2890		coperchio di raccordo gas destra porta glissante	connection cover gas right sliding door			1	
	72.3237		coperchio di raccordo gas sinistra porta glissante	connection cover gas left sliding door				1
	72.3235		coperchio di raccordo gas destra porta glissante	connection cover gas right sliding door				1
10	72.2490		parete posteriore mezzo	rear panel middle	1			
	72.2525		parete posteriore mezzo	rear panel middle		1		
	72.2526		parete posteriore mezzo	rear panel middle			1	
	72.2527		parete posteriore mezzo	rear panel middle				1
11	712 044 120.05	1101 8576	dado	captire nut	2	2	2	2
12	72.2176		portatore	girder	1	1	1	1
13	1701 2597		vite	screw	4	4	4	4
14	1701 3545		disco	disk	4	4	4	4
15	712 044 120.06	1101 8577	dado	captire nut	4	4	4	4
16	72.2048	1900 6949	guscio di distanza	spacer sleeve	4	4	4	4
17	1701 3008	1900 6950	dado	nut	2	2	2	2
18	72.3171	1900 6951	quadrello	bolt	2	2	2	2
19	72.2467		copertura superiore	filler upper	1			
	72.2468		copertura superiore	filler upper		1		
	72.2469		copertura superiore	filler upper			1	
	72.2470		copertura superiore	filler upper				1

globalgastroparts.com - szervizaruhaz.hu

			unità	unit			Large 72.3090.01		
	H=800 mm		telaio	frame					5
			fissaggio del suolo	bottom fixation					10.4.1995
Pos.	Produkt Nr.	Service Nr.	designatione	designation		159	249	259	359
20	75.2011.03	1800 0864	morsa	clamp		1	1	1	1
21	75.2010.41	1800 0863	morsa	clamp		1	1	1	1
22	75.2010.40	1800 0529	morsa	clamp		6	6	6	6
23	75.2010.43		separazione	partition wall		4	4	4	4
24	75.2013		arresto	stopper		1	1	1	1
25	705 840 171		cavetto	strand		1	1	1	1
40	72.3768		copertura	filler		1	1	1	1
			cucina-parete	range-wall					
	705 030 227		copertura	filler		1	1	1	1
			tavolo-parete	table-wall					
	72.3955		copertura	filler		1	1	1	1
			cucina-cucina	range-range					
			con stecca	with rail					
	72.3954		copertura	filler		1	1	1	1
			cucina-cucina	range-range					
			senza stecca	without rail					
	72.4134		copertura	filler		1	1	1	1
			cucina-tavolo laterale	range-end-spreader					
45	75.6519		lamina per HS	foil for HS		1	1	1	1
	72.6371		lamina per HS	foil for HS	Electrolux	1	1	1	1

globalgastroparts.com - szervizaruhaz.hu

			Baugruppe	unità	unit					Large 72.3090.01
		H=800mm	Gestell	telaio	frame					6
			Bodenbefestigung	fissaggio del suolo	bottom fixation					10.4.1995
Pos.	Produkt Nr.	Service Nr.	Bezeichnung	designatione	designation		159	249	259	359
30			Sockel	zoccolo	plinth	H=100mm				
			freistehend	isolato	free standing	T=760mm				
	72.1062.01		B=400mm							
	72.1062.02		B=500mm							
	72.1062.03		B=800mm							
	72.1062.04		B=1000mm							
	72.1062.05		B=1200mm							
	72.1062.06		B=1300mm							
	72.1062.07		B=1500mm							
	72.1062.08		B=1600mm							
	72.1062.09		B=1800mm							
	72.1062.10		B=2000mm							
			Sockel	zoccolo	plinth	H=100mm				
			wandstehend	posizionato al muro	wall standing	T=830mm				
	72.1042.01		B=400mm							
	72.1042.02		B=500mm							
	72.1042.03		B=800mm							
	72.1042.04		B=1000mm							
	72.1042.05		B=1200mm							
	72.1042.06		B=1300mm							
	72.1042.07		B=1500mm							
	72.1042.08		B=1600mm							
	72.1042.09		B=1800mm							
	72.1042.10		B=2000mm							

globalgastroparts.com - szervizaruhaz.hu

	H=700 mm		unità telaio fissaggio del suolo	unit frame bottom fixation	Large 72.3090.01a 7 12/97			
Pos.	Produkt Nr.	Service Nr.	designatione	designation	159	249	259	359
1	72.4691.01		telaio senza Supertherm	frame without Supertherm	1			
	72.4691.02		telaio con Supertherm	frame with Supertherm	1			
	72.4691.03		telaio marine senza Supertherm	frame marine without Supertherm	1			
	72.4691.04		telaio marine con Supertherm	frame marine with Supertherm	1			
	72.5122.01		telaio	frame		1		
	72.5122.02		telaio marine	frame marine		1		
	72.4579.01		telaio senza Supertherm	frame without Supertherm			1	
	72.4579.02		telaio con Supertherm	frame with Supertherm			1	
	72.4579.03		telaio marine senza Supertherm	frame marine without Supertherm			1	
	72.4579.04		telaio marine con Supertherm	frame marine with Supertherm			1	
	72.4579.05		telaio con 2 zone di cottura a gas sinistra	frame with 2 gas cooking zones left			1	
	72.4579.06		telaio con 2 zone di cottura a gas destra	frame with 2 gas cooking zones right			1	
	72.4579.07		telaio con 2 zone di cottura a gas sinistra + MS	frame with 2 gas cooking zones left + MS			1	
	72.4579.08		telaio con 2 zone di cottura a gas destra + MS	frame with 2 gas cooking zones right + MS			1	

globalgastroparts.com - szervizaruhaz.hu

			unità	unit		Large 72.3090.01a		
	H=700 mm		telaio	frame				8
			fissaggio del suolo	bottom fixation				12/97
Pos.	Produkt Nr.	Service Nr.	designatione	designation	159	249	259	359
1	72.4736.01	Induction	telaio	frame	1			
	72.4736.02	Induction	telaio marine	frame marine	1			
	72.4925.01	Induction	telaio	frame			1	
	72. 4925.02	Induction	telaio marine	frame marine			1	
	72.5231.01	Induction	telaio	frame			1	
			induzione tutta piastra	full-surface induction				
	72.5231.0	Marine Induction	telaio	frame			1	
			induzione tutta piastra	full-surface induction				
2	72.4557		parete laterale	side panel	2	2	2	2
3, 4	72.5105		parete laterale	side panel	2	2	2	2
			per ripiano	for shelf				
5	72.4560		parete posteriore	rear panel	1			
	72.5100		parete posteriore	rear panel		1		
	72.4581		parete posteriore	rear panel			1	
	72.5102		parete posteriore	rear panel				1
	72.5149	Marine	parete posteriore	rear panel	1			
	72.5150	Marine	parete posteriore	rear panel		1		
	72.5151	Marine	parete posteriore	rear panel			1	
	72.5152	Marine	parete posteriore	rear panel				1
6	72.4561		coperchio di raccordo	connection cover	1			
	72.4993		coperchio di raccordo	connection cover		1		
	72.4582		coperchio di raccordo	connection cover			1	
	72.5230	Induction	coperchio di raccordo	connection cover			1	
	72.5236	Induction GFI	coperchio di raccordo	connection cover			1	
	72.4994		coperchio di raccordo	connection cover				1
	72.4801	Marine	coperchio di raccordo	connection cover	1			
	72.5145	Marine	coperchio di raccordo	connection cover		1		
	72.4802	Marine	coperchio di raccordo	connection cover			1	
	72.5146	Marine	coperchio di raccordo	connection cover				1
6a	72.4737	Induction	parete anteriore	front wall	1			
	72.4996	Induction	parete anteriore	front wall		1		

globalgastroparts.com - szervizaruhaz.hu

			unità	unit			Large 72.3090.01a		
	H=700 mm		telaio	frame					9
			fissaggio del suolo	bottom fixation					12/97
Pos.	Produkt Nr.	Service Nr.	designatione	designation		159	249	259	359
40	72.4474		copertura cucina-parete	filler range-wall		1	1	1	1
	72.4893		copertura tavolo-parete	filler table-wall		1	1	1	1
	72.5158		copertura cucina-cucina con stecca	filler range-range with rail		1	1	1	1
	72.5159		copertura cucina-cucina senza stecca	filler range-range without rail		1	1	1	1
	72.5160		copertura cucina-tavolo laterale	filler range-end-spreader		1	1	1	1
45	75.6519		lamina per HS	foil for HS		1	1	1	1
	72.6371		lamina per HS	foil for HS	Electrolux	1	1	1	1
30			zoccolo isolato	plinth free standing	H=200mm T=760mm				
	72.5251.02		B=200mm						
	72.5251.03		B=300mm						
	72.5251.04		B=400mm						
	72.5251.05		B=500mm						
	72.5251.06		B=600mm						
	72.5251.07		B=700mm						
	72.5251.08		B=800mm						
	72.5251.09		B=900mm						
	72.5251.10		B=1000mm						
	72.5251.11		B=1100mm						
	72.5251.12		B=1200mm						
	72.5251.13		B=1300mm						
	72.5251.14		B=1400mm						
	72.5251.15		B=1500mm						
	72.5251.16		B=1600mm						
	72.5251.17		B=1700mm						
	72.5251.18		B=1800mm						
	72.5251.19		B=1900mm						
	72.5251.20		B=2000mm						

globalgastroparts.com - szervizaruhaz.hu

		unità	unit		Large 72.3090.01a
H=700mm		telaio	frame		10
		fissaggio del suolo	bottom fixation		10.4.1995

Pos.	Produkt Nr.	Service Nr.	designatione	designation		159	249	259	359
30			zoccolo	plinth	H=200mm				
			posizionato al muro	wall standing	T=830mm				
	72.5252.02		B=200mm						
	72.5252.03		B=300mm						
	72.5252.04		B=400mm						
	72.5252.05		B=500mm						
	72.5252.06		B=600mm						
	72.5252.07		B=700mm						
	72.5252.08		B=800mm						
	72.5252.09		B=900mm						
	72.5252.10		B=1000mm						
	72.5252.11		B=1100mm						
	72.5252.12		B=1200mm						
	72.5252.13		B=1300mm						
	72.5252.14		B=1400mm						
	72.5252.15		B=1500mm						
	72.5252.16		B=1600mm						
	72.5252.17		B=1700mm						
	72.5252.18		B=1800mm						
	72.5252.19		B=1900mm						
	72.5252.20		B=2000mm						

	spiegazione	**explanation**
GS	rubinetto del gas	gas cock
HS	interrutore generale el.	el. main interruptor
BO	forno	baking oven
IN	cucina ad induzione	induction range
GFI	induzione tutta piastra	full-surface induction
R	destra	right
L	sinistra	left

globalgastroparts.com - szervizeruhazhu

Compact 72.3780.02
Large 72 3090.02
16.12.94

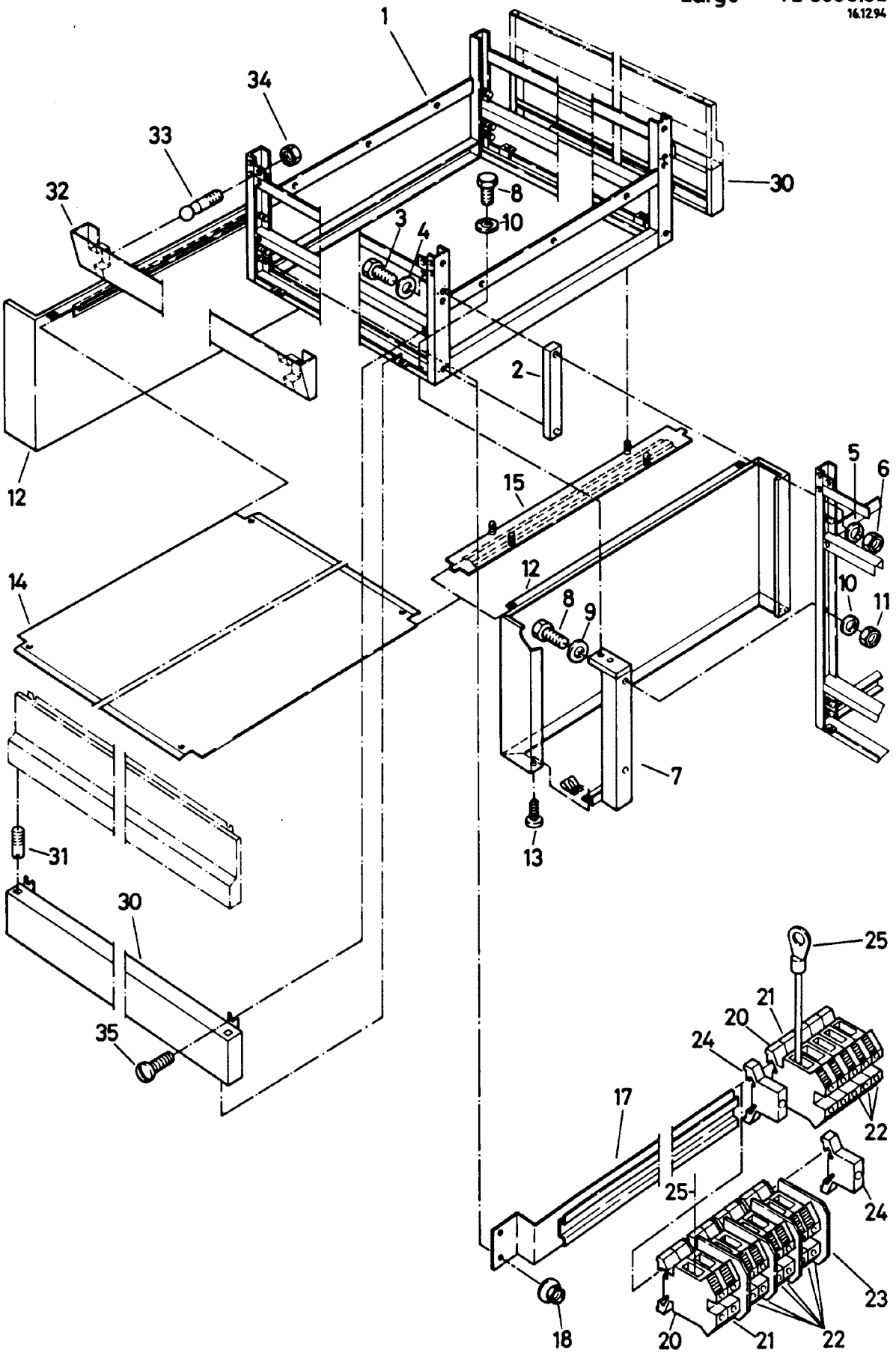

globalgastroparts.com - szervizaruhaz.hu

			unità	unit		Large 72.3090.02
	H=400 mm		telaio p. ponte	frame f. bridge		1
						10.4.1995

Pos.	Produkt Nr.	Service Nr.	designatione	designation		
1	72.3504		telaio	frame	129	1
	72.2905.01		telaio senza Supertherm	frame without Supertherm	159	1
	72.2905.02		telaio con Supertherm	frame with Supertherm	159	1
	72.2905.03	Marine	telaio senza Supertherm	frame without Supertherm	159	1
	72.2905.04	Marine	telaio con Supertherm	frame with Supertherm	159	1
	72.3695.01		telaio senza Supertherm	frame without Supertherm	249	1
	72.3695.02		telaio con Supertherm	frame with Supertherm	249	1
	72.2906.01		telaio senza Supertherm	frame without Supertherm	259	1
	72.2906.02		telaio con Supertherm	frame with Supertherm	259	1
	72.2906.03		telaio senza Supertherm 2 zone di cottura a gas sinistra	frame without Supertherm 2 cooking zones left	259	1
	72.2906.04		telaio senza Supertherm 2 zone di cottura a gas destra	frame without Supertherm 2 cooking zones right	259	1
	72.2906.05		telaio con Supertherm 2 zone di cottura a gas sinistra	frame with Supertherm 2 cooking zones left	259	1
	72.2906.06		telaio con Supertherm 2 zone di cottura a gas destra	frame with Supertherm 2 cooking zones right	259	1
	72.2906.07		telaio con copertura continuata destra	frame with continuous cover right	259	1

globalgastroparts.com - szervizaruhaz.hu

			unità	unit		Large 72.3090.02
	H=400 mm		telaio p. ponte	frame f. bridge		2 10.4.1995
Pos.	Produkt Nr.	Service Nr.	designatione	designation		
	72.2906.08		telaio con copertura continuata sinistra	frame with continuous cover left	259	1
	72.2906.09		telaio con copertura continuata destra, 2 zone di cottura gas sinistra	frame with continuous cover right, 2 cooking zones left	259	1
	72.2906.10		telaio con copertura continuata sinistra, 2 zone di cottura gas destra	frame with continuous cover left, 2 cooking zones right	259	1
	72.2906.11		telaio con copertura continuata destra, 2 zone di cottura gas sinistra, con Supertherm	frame with continuous cover right, 2 cooking zones left, with Supertherm	259	1
	72.2906.12		telaio con copertura continuata sinistra, 2 zone di cottura gas destra, con Supertherm	frame with continuous cover left, 2 cooking zones right, with Supertherm	259	1
	72.2336.01		telaio senza Supertherm	frame without Supertherm	359	1
	72.2336.02		telaio con Supertherm	frame with Supertherm	359	1
	72.2336.03		telaio senza Supertherm con 2 zone di cottura a gas sinistra	frame without Supertherm with 2 gas cooking zones left	359	1
	72.2336.04		telaio senza Supertherm con 2 zone di cottura a gas destra	frame without Supertherm with 2 gas cooking zones right	359	1

globalgastroparts.com - szervizaruhaz.hu

	H=400 mm		unità telaio p. ponte	unit frame f. bridge					Large 72.3090.02 3 10.4.1995
Pos.	Produkt Nr.	Service Nr.	designatione	designation					
	72.2336.05		telaio Supertherm destra 2 zone di cottura a gas sinistra	frame Supertherm right 2 gas cooking zones left	359	1			
	72.2336.06		telaio Supertherm sinistra 2 zone di cottura a gas destra	frame Supertherm left 2 gas cooking zones right	359	1			
	72.3043.01	Induction	telaio	frame	159	1			
	72.3043.02	Induc. Marine	telaio	frame	159	1			
	72.3029.01	Induction	telaio normale	frame standard	259	1			
	72.3029.02	Induction	telaio marina	frame marine	259	1			
2	72.2343		pezzo di congiungim.	junction part		2			
3	1101 8146		vite	screw	M10x40	4			
4	701 3513		disco	disk	M10	4			
5	1701 5008		anello di molla	spring ring	M10	4			
6	1701 3027		dado	nut	M10	4			
7	72.2344		sostegno	stud		2			
8	1101 8040		vite	screw	M6x20	8			
9	1701 3545		disco	disk	M6	8			
10	1701 5007		anello di molla	spring ring	M6	4			
11	1701 3016		dado	nut	M6	4			
12	72.3078		pezzo di congiungim.	junction part		1			
13	1701 7541	1900 6953	vite	screw		2			
14	72.3508.XX		fondo	base	129		01	01	02
	72.3037.XX		fondo	base	159	01	02	02	03
	72.3696.XX		fondo	base	249	01	02	02	03
	72.3039.XX		fondo	base	259	01	02	02	03
	72.3059.XX		fondo	base	359	01	02	02	03
15	72.3065		portatore	girder		1			
16	72.2781		portatore	girder		1			
17	72.2176		portatore	girder		1			
18	712 044 120.05		dado	captire nut	M5	2			

globalgastroparts.com - szervizaruhaz.hu

	H=400 mm		Baugruppe Gestell f. Brücke	unité cadre p. pont	unità telaio p. ponte	unit frame f. bridge	Large 72.3090.02 4/6 10.4.1995
Pos.	Produkt Nr.	Service Nr.	Bezeichnung	désignation	designatione	designation	
			Supertherm	Supertherm	Supertherm	Supertherm	
20	75.2011.03	1800 0864	Klemme	borne	morsa	clamp	1
21	75.2010.41	1800 0863	Klemme	borne	morsa	clamp	1
22	75.2010.40	1800 0529	Klemme	borne	morsa	clamp	6
23	75.2010.43		Abschlusswand	paroi de recouvrement	parete di chiusura	end panel	4
24	75.2013		Arretierstück	piece d'arrête	parte d'arresto	stopper part	1
25	705 840171		Litze	fil souple	cavetto	strand	1

globalgastroparts.com - szervizaruhaz.hu

		unità	unit		Large 72.3090.02
H=400 mm		telaio p. ponte	frame f. bridge		5
					10.4.1995

Pos.	Produkt Nr.	Service Nr.	designatione	designation			
30	72.3746		coperchio di raccordo	connection cover	200	1	2
	72.2646		coperchio di raccordo	connection cover	500	1	2
	72.3613		coperchio di raccordo	connection cover	800	1	2
	72.2975		coperchio di raccordo	connection cover	1000	1	2
	72.2531		coperchio di raccordo	connection cover	1500	1	2
31	72.3061		bolzone con filetto	threaded bolt	M5x14	2	4
32	72.3147		copertura superiore senza mensola	filler upper bearing bracket	200	1	2
	72.2467		copertura superiore senza mensola	filler upper without bearing bracket	500	1	2
	72.2468		copertura superiore senza mensola	filler upper without bearing bracket	800	1	2
	72.2469		copertura superiore senza mensola	filler upper without bearing bracket	1000	1	2
	72.2470		copertura superiore senza mensola	filler upper without bearing bracket	1500	1	2
	72.3149		copertura superiore con mensola	filler upper with bearing bracket	200	1	2
	72.2482		copertura superiore con mensola	filler upper with bearing bracket	500	1	2
	72.2483		copertura superiore con mensola	filler upper with bearing	800	1	2
	72.2484		copertura superiore con mensola	filler upper with bearing	1000	1	2
	72.2485		copertura superiore con mensola	filler upper with bearing	1500	1	2
	72.3151		copertura superiore mensola destra	filler upper bearing right	200	1	2
	72.2477		copertura superiore mensola destra	filler upper bearing right	500	1	2
	72.2478		copertura superiore mensola destra	filler upper bearing right	800	1	2
	72.2479		copertura superiore mensola destra	filler upper bearing right	1000	1	2

globalgastroparts.com - szervizaruhaz.hu

	H=400 mm		unità telaio p. ponte	unit frame f. bridge			Large 72.3090.02 6 10.4.1995

Pos.	Produkt Nr.	Service Nr.	designatione	designation			
32	72.2480		copertura superiore mensola destra	filler upper bearing right	1500	1	2
	72.3153		copertura superiore mensola sinestra	filler upper bearing left	200	1	2
	72.2472		copertura superiore mensola sinestra	filler upper bearing left	500	1	2
	72.2473		copertura superiore mensola sinestra	filler upper bearing left	800	1	2
	72.2474		copertura superiore mensola sinestra	filler upper bearing left	1000	1	2
	72.2475		copertura superiore mensola sinestra	filler upper bearing left	1500	1	2
33	72.3171	1900 6951	quadrello	bolt		2	4
34	1701 3008	1900 6950	dado	nut		2	4
35	1701 2019		vite	screw	M4x8	2	4

globalgastroparts.com - szervizalkatreszek.hu

Compact 72.3780.03
Large 72.3090.03
16.12.94

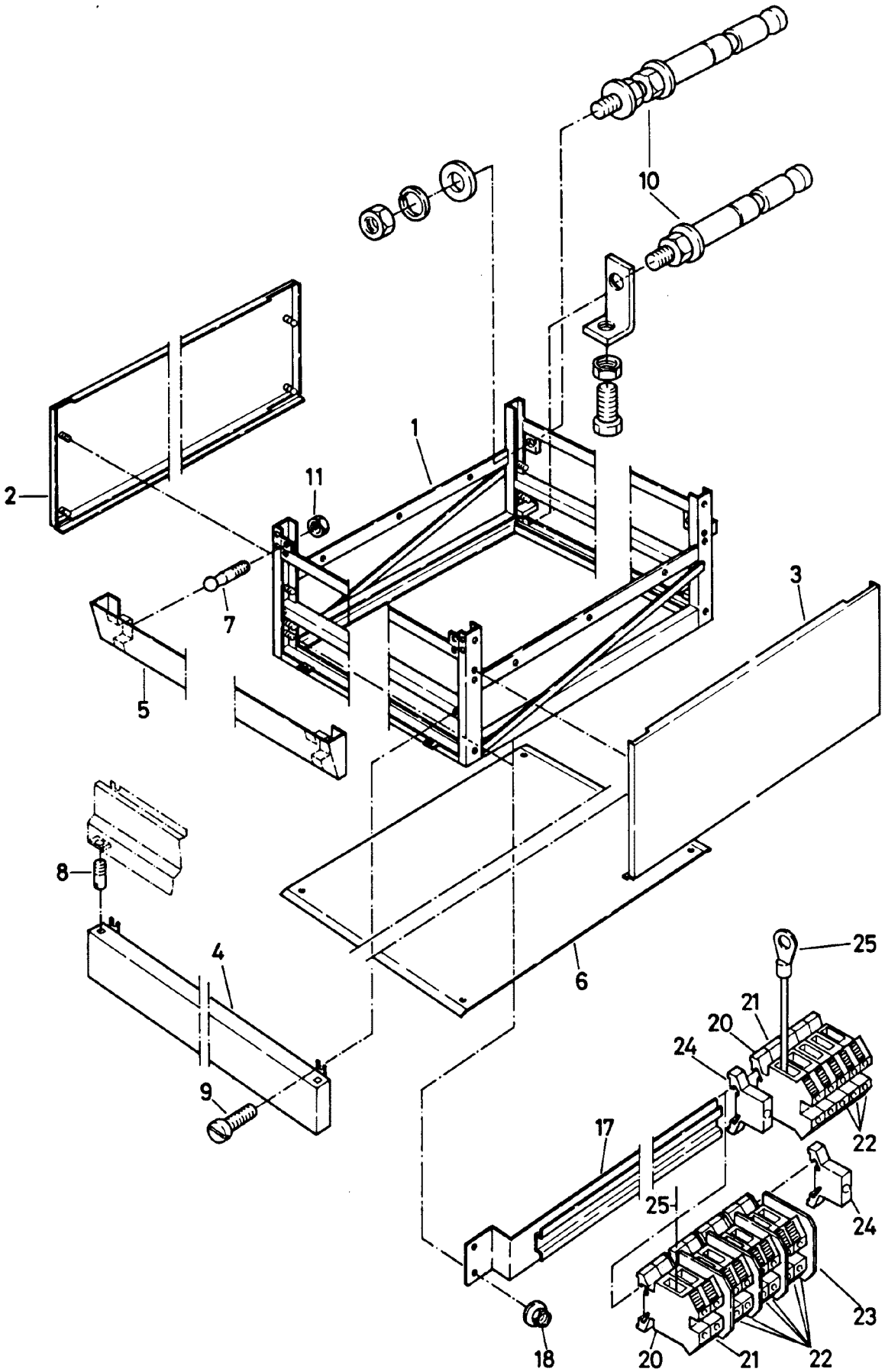

globalgastroparts.com - szervizaruhaz.hu

			unità	unit		Large 72.3090.03
	H=400 mm		telaio	frame		1
			montaggio a muro	wall mounted		10.4.1995

Pos.	Produkt Nr.	Service Nr.	designatione	designation		
1	72.3505		telaio	frame	129	1
	72.2637.01		telaio senza Supertherm	frame without Supertherm	159	1
	72.2637.02		telaio con Supertherm	frame with Supertherm	159	1
	72.3692.01		telaio senza Supertherm	frame without Supertherm	249	1
	72.3692.02		telaio con Supertherm	frame with Supertherm	249	1
	72.2638.01		telaio senza Supertherm	frame without Supertherm	259	1
	72.2638.02		telaio con Supertherm	frame with Supertherm	259	1
	72.2638.03		telaio senza Supertherm 2 zone di cottura a gas sinistra	frame without Supertherm 2 cooking zones left	259	1
	72.2638.04		telaio senza Supertherm 2 zone di cottura a gas destra	frame without Supertherm 2 cooking zones right	259	1
	72.2638.05		telaio con Supertherm 2 zone di cottura a gas sinistra	frame with Supertherm 2 cooking zones left	259	1
	72.2638.06		telaio con Supertherm 2 zone di cottura a gas destra	frame with Supertherm 2 cooking zones right	259	1
	72.2638.07		telaio copertura continuata destra	frame continuous cover right	259	1
	72.2638.08		telaio copertura continuata sinistra	frame continuous cover left	259	1

globalgastroparts.com - szervizaruhaz.hu

			unità	unit			Large 72.3090.03
	H=400 mm		telaio	frame			2
			montaggio a muro	wall mounted			10.4.1995
Pos.	Produkt Nr.	Service Nr.	designatione	designation			
	72.2638.09		telaio copertura continuata destra 2 zone di cottura a gas sinistra	frame continuous cover right 2 gas cooking zones left	259	1	
	72.2638.10		telaio copertura continuata sinistra 2 zone di cottura a gas destra	frame continuous cover left 2 gas cooking zones right	259	1	
	72.2638.11		telaio copertura continuata destra 2 zone di cottura a gas sinistra con Supertherm	frame continuous cover right 2 gas cooking zones left with Supertherm	259	1	
	72.2638.12		telaio copertura continuata sinistra 2 zone di cottura a gas destra con Supertherm	frame continuous cover left 2 gas cooking zones right with Supertherm	259	1	
	72.2353.01		telaio senza Supertherm	frame without Supertherm	359	1	
	72.2353.02		telaio con Supertherm	frame with Supertherm	359	1	
	72.2353.03		telaio senza Supertherm 2 zone di cottura a gas sinistra	frame without Supertherm 2 gas cooking zones left	359	1	
	72.2353.04		telaio senza Supertherm 2 zone di cottura a gas destra	frame without Supertherm 2 gas cooking zones right	359	1	

globalgastroparts.com - szervizaruhaz.hu

			unità	unit			Large 72.3090.03
	H=400 mm		telaio	frame			3
			montaggio a muro	wall mounted			10.4.1995
Pos.	Produkt Nr.	Service Nr.	designatione	designation			
	72.2353.05		telaio con Supertherm destra 2 zone di cottura a gas sinistra	frame with Supertherm right 2 gas cooking zones left	359	1	
	72.2353.06		telaio con Supertherm sinistra 2 zone di cottura a gas destra	frame with Supertherm left 2 gas cooking zones right	359	1	
	72.3031.01	Induction	telaio normale	frame standard	159	1	
	72.3031.02	Induction	telaio marina	frame marine	159	1	
	72.3033.01	Induction	telaio normale	frame standard	259	1	
	72.3033.02	Induction	telaio marina	frame marine	259	1	
2	72.2724		parete laterale sinistra	side panel left		1	
3	72.2725		parete laterale destra	side panel right		1	
4	72.3746		coperchio di raccordo	connection cover	200	1	
	72.2646		coperchio di raccordo	connection cover	500	1	
	72.3613		coperchio di raccordo	connection cover	800	1	
	72.2975		coperchio di raccordo	connection cover	1000	1	
	72.2531		coperchio di raccordo	connection cover	1500	1	
5	72.3147		copertura superiore senza mensola	filler upper without bearing bracket	200	1	
	72.2467		copertura superiore senza mensola	filler upper without bearing bracket	500	1	
	72.2468		copertura superiore senza mensola	filler upper without bearing bracket	800	1	
	72.2469		copertura superiore senza mensola	filler upper without bearing bracket	1000	1	
	72.2470		copertura superiore senza mensola	filler upper without bearing bracket	1500	1	
	72.3149		copertura superiore con mensola	filler upper with bearing bracket	200	1	

globalgastroparts.com - szervizaruhaz.hu

			unità	unit		Large 72.3090.03
	H=400 mm		telaio	frame		4
			montaggio a muro	wall mounted		10.4.1995
Pos.	Produkt Nr.	Service Nr.	designatione	designation		
5	72.2482		copertura superiore con mensola	filler upper with bearing bracket	500	1
	72.2483		copertura superiore con mensola	filler upper with bearing	800	1
	72.2484		copertura superiore con mensola	filler upper with bearing	1000	1
	72.2485		copertura superiore con mensola	filler upper with bearing	1500	1
	72.3151		copertura superiore mensola destra	filler upper bearing right	200	1
	72.2477		copertura superiore mensola destra	filler upper bearing right	500	1
	72.2478		copertura superiore mensola destra	filler upper bearing right	800	1
	72.2479		copertura superiore mensola destra	filler upper bearing right	1000	1
	72.2480		copertura superiore mensola destra	filler upper bearing right	1500	1
	72.3153		copertura superiore mensola sinestra	filler upper bearing left	200	1
	72.2472		copertura superiore mensola sinestra	filler upper bearing left	500	1
	72.2473		copertura superiore mensola sinestra	filler upper bearing left	800	1
	72.2474		copertura superiore mensola sinestra	filler upper bearing left	1000	1
	72.2475		copertura superiore mensola sinestra	filler upper bearing left	1500	1

globalgastroparts.com - szervizaruhaz.hu

			unità	unit		Large 72.3090.03
	H=400 mm		telaio	frame		5
			montaggio a muro	wall mounted		10.4.1995

Pos.	Produkt Nr.	Service Nr.	designatione	designation		
6	72.3509		fondo	base	129	1
	72.2656		fondo	base	159	1
	72.3694		fondo	base	249	1
	72.2982		fondo	base	259	1
	72.3186		fondo	base	359	1
	72.4265	Induction	fondo	base	159	1
	72.4293	Induction	fondo	base	259	1
7	72.3171	1900 6951	quadrello	bolt		2
8	72.3061	1900 6952	bolzone con filetto	threaded bolt	M5x14	2
9	1701 2019		vite	screw	M4x8	2
10	71.5002		materiale di fissaggio	fixation material		1
16	72.2781		portatore	girder		1
17	72.2176		portatore	girder		1
18	712 044 120.05		dado	captire nut	M5	2
			Supertherm	Supertherm		
20	75.2011.03	1800 0864	morsa	clamp		1
21	75.2010.41	1800 0863	morsa	clamp		1
22	75.2010.40	1800 0529	morsa	clamp		6
23	75.2010.43		parete di chiusura	end panel		4
24	75.2013		parte d'arresto	stopper part		1
25	705 840 171		cavetto	strand		1
20	75.2011.03	1800 0864	morsa	clamp		1
21	75.2010.41	1800 0863	morsa	clamp		1
22	75.2010.40	1800 0529	morsa	clamp		3

globalgastroparts.com - szervizaruhaz.hu

	H=700 mm		unità telaio montaggio a muro	unit frame wall mounted			Large 72.3090.03a 6 12/97
Pos.	Produkt Nr.	Service Nr.	designatione	designation			
1	72.5133.01		telaio senza Supertherm	frame without Supertherm	159	1	
	72.5133.02		telaio con Supertherm	frame with Supertherm	159	1	
	72.5133.03		telaio marine senza Supertherm	frame marine without Supertherm	159	1	
	72.5133.04		telaio con Supertherm	frame with Supertherm	159	1	
	72.5138.01		telaio normale	frame standard	249	1	
	72.5138.02		telaio marina	frame marine	249	1	
	72.5139.01		telaio senza Supertherm	frame without Supertherm	259	1	
	72.5139.02		telaio con Supertherm	frame with Supertherm	259	1	
	72.5139.03		telaio marine senza Supertherm	frame marine without Supertherm	259	1	
	72.5139.04		telaio marine con Supertherm	frame marine with Supertherm	259	1	
	72.5139.05		telaio con 2 zone di cottura a gas sinistra	frame with 2 gas cooking zones left	259	1	
	72. 5139.06		telaio con 2 zone di cottura a gas destra	frame with 2 gas cooking zones right	259	1	
	72.5139.07		telaio con 2 zone di cottura a gas sinistra + MS	frame with 2 gas cooking zones left + MS	259	1	
	72.5139.08		telaio con 2 zone di cottura a gas destra + MS	frame with 2 gas cooking zones right + MS	259	1	

globalgastroparts.com - szervizaruhaz.hu

	H=700 mm		unità telaio montaggio a muro	unit frame wall mounted		Large 72.3090.03a 7 12/97
Pos.	Produkt Nr.	Service Nr.	designatione	designation		
	72.5134.01	Induction	telaio normale	frame standard	159	1
	72.5134.02	Induction	telaio marina	frame marine	159	1
	72.5140.01	Induction	telaio normale	frame standard	259	1
	72.5140.02	Induction	telaio marina	frame marine	259	1
	72.5233	Induction	telaio induzione tutta piastra	frame full-surface induction	259	1
2	72.5103		parete laterale sinistra	side panel left		1
3	72.5156		parete laterale destra	side panel right		1
4	72.4991		coperchio di raccordo	connection cover	200	1
	72.4561		coperchio di raccordo	connection cover	500	1
	72.4993		coperchio di raccordo	connection cover	800	1
	72.4582		coperchio di raccordo	connection cover	1000	1
	72.4960	Induction	coperchio di raccordo	connection cover	1000	1
	72.4994		coperchio di raccordo	connection cover	1500	1
4	72.5143	Marine	coperchio di raccordo	connection cover	200	1
	72.4801	Marine	coperchio di raccordo	connection cover	500	1
	72.5145	Marine	coperchio di raccordo	connection cover	800	1
	72.4802	Marine	coperchio di raccordo	connection cover	1000	1
	72.5146	Marine	coperchio di raccordo	connection cover	1500	1
4a	72.4737	Induction	parete anteriore	front wall	500	1
	72.4996	Induction	parete anteriore	front wall	800	1

globalgastroparts.com - szervizeruk.com

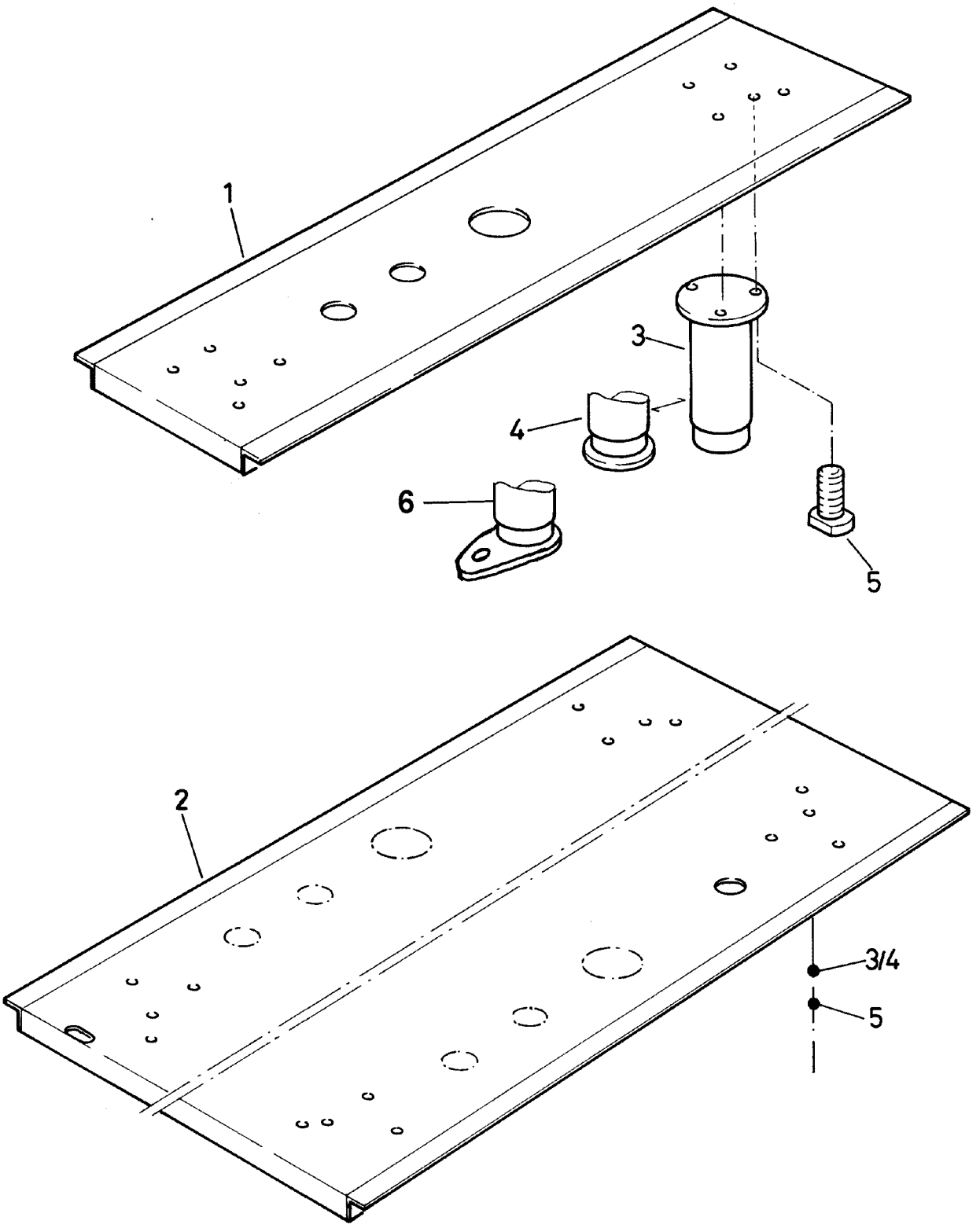

globalgastroparts.com - szervizaruhaz.hu

			Baugruppe Gestell Bodenplatte	unité cadre plaque de fond	unità telaio placca del suolo	unit frame base plate	Compact 72.3780 / Large 72.3090.04		1/4 20.11.97
Pos.	Produkt Nr.	Service Nr.	Bezeichnung	désignation	designatione	designation			
1			Bodenplatte	plaque de fond	placca del suolo	base plate			1
2			Bodenplatte	plaque de fond	placca del suolo	base plate			1
3	72.4344		Fuss	pied	piede	foot	100mm		2 - 4
	72.4249		Fuss	pied	piede	foot	200mm		2 - 4
4	72.4351.01		Fuss	pied	piede	foot	100mm	Marine	2 - 4
	72.4250		Fuss	pied	piede	foot	200mm	Marine	2 - 4
5	75.5006.06		Schraube	vis	vite	screw	M4		6 - 12
6	72.4351.02		Fuss	pied	piede	foot	100mm		2 - 4
	72.4350.02		Fuss	pied	piede	foot	200mm		2 - 4

	Erklärung	**explication**	**spiegazione**	**explanation**
(H)	Gerät Höhe 700mm	appareil hauteur 700mm	apparecchio altezza 700mm	appliance height 700mm
ET	Endtisch	table attenante	tavolo laterale	end-spreader
ZT	Zwischentisch	table intermédiaire	tavolo intermedio	centre-spreader

globalgastroparts.com - szervizajtok.hu

Herdmodell/Type de fourneua/Tipo di cucina/Range model	Produkt Nr	Herdmodell/Type de fourneua/Tipo di cucina/Range model	Produkt Nr	Herdmodell/Type de fourneua/Tipo di cucina/Range model	Produkt Nr
129	72.5188	359	72.5190.XX	148	72.5186.XX
159	72.4259.XX	459	72.4260.XX+72.4260.XX	128	72.5185
249	72.5189.XX	ET + ZT	72.4746.XX	248	72.4352.XX
259	72.4260.XX	158	72.4353.XX	258	72.5187.XX

(H) LE129-100	72.5188	(H) LE249-227	72.5189.02	HLE259-552	72.4260.05
(H) LE129-103	72.5188	(H) LE259-345	72.4260.06	HLE259-553	72.4260-05
(H) LE129-104	72.5188	(H) LE259-346	72.4260.06	LE259-554	72.4260.02
(H) LE159-341	72.4259.07	(H) LE259-347	72.4260.06	LE259-555	72.4260.02
(H) LE159-342	72.4259.07	(H) LE259-348	72.4260.06	LE259-562	72.4260.02
(H) LE159-343	72.4259.07	(H) LE259-343	72.4260.06	LE259-563	72.4260.02
(H) LE159-344	72.4259.07	(H) LE259-344	72.4260.06	(H) LE259-570	72.4260.02
(H) LE159-361	72.4259.01	(H) LE259-380	72.4260.01	(H) LE259-571	72.4260.02
(H) LE159-362	72.4259.01	(H) LE259-381	72.4260.01	HLE259-554	72.4260.02
(H) LE159-363	72.4259.01	(H) LE259-382	72.4260.01	HLE259-555	72.4260.02
(H) LE159-364	72.4259.01	(H) LE259-383	72.4260.01	LE259-556	72.4260.04
LI159-371	72.4259.01	(H) LE259-384	72.4260.01	LE259-557	72.4260.04
LI159-372	72.4259.01	(H) LE259-385	72.4260.01	LE259-564	72.4260.04
HLI159-371	72.4259.01	LI259-375	72.4260.01	LE259-565	72.4260.04
HLI159-372	72.4259.01	LI259-376	72.4260.01	(H) LE259-572	72.4260.04
LI159-373	72.4259.01	LI259-371	72.4260.01	(H) LE259-573	72.4260.04
LI159-374	72.4259.01	LI259-372	72.4260.01	HLE259-556	72.4260.04
HLI159-373	72.4259.01	LI259-373	72.4260.01	HLE259-557	72.4260.04
HLI159-374	72.4259.01	LI259-374	72.4260.01	LK259-600	72.4260.05
LI159-221	72.4259.01	HLI259-375	72.4260.01	LK259-601	72.4260.05
LI159-222	72.4259.01	HLI259-376	72.4260.01	LK259-604	72.4260.05
HLI159-221	72.4259.01	LI259-390	72.4260.01	LK259-605	72.4260.05
HLI159-222	72.4259.01	LI259-391	72.4260.01	(H) LK259-608	72.4260.05
(H) LG159-703	72.4259.05	HLI259-390	72.4260.01	(H) LK259-609	72.4260.05
(H) LG159-704	72.4259.05	HLI259-391	72.4260.01	HLK259-600	72.4260.05
(H) LK159-707	72.4259.05	(H) LG259-711	72.4260.05	HLK259-601	72.4260.05
(H) LK159-708	72.4259.05	(H) LG259-712	72.4260.05	LK259-602	72.4260.03
(H) LE159-252	72.4259.05	(H) LK259-727	72.4260.05	LK259-603	72.4260.03
(H) LE159-256	72.4259.05	(H) LK259-728	72.4260.05	LK259-606	72.4260.03
(H) LE159-232	72.4259.05	(H) LK259-707	72.4260.05	LK259-607	72.4260.03
(H) LE159-236	72.4259.05	(H) LK259-708	72.4260.05	(H) LK259-610	72.4260.03
(H) LE159-262	72.4259.03	LE259-901	72.4260.03	(H) LK259-611	72.4260.03
(H) LE159-266	72.4259.03	LE259-902	72.4260.03	HLK259-602	72.4260.03
(H) LE159-242	72.4259.03	LE259-945	72.4260.03	HLK259-603	72.4260.03
(H) LE159-246	72.4259.03	LE259-946	72.4260.03	(H) LE259-088	72.4260.01
(H) LE159-251	72.4259.04	(H) LE259-929	72.4260.03	(H) LE259-091	72.4260.01
(H) LE159-255	72.4259.04	(H) LE259-930	72.4260.03	(H) LE259-094	72.4260.01
(H) LE159-231	72.4259.04	HLE259-901	72.4260.03	(H) LE259-089	72.4260.01
(H) LE159-235	72.4259.04	HLE259-902	72.4260.03	(H) LE259-092	72.4260.01
(H) LE159-261	72.4259.02	LE259-903	72.4260.05	(H) LE259-095	72.4260.01
(H) LE159-265	72.4259.02	LE259-904	72.4260.05	(H) LE259-090	72.4260.01
(H) LE159-241	72.4259.02	LE259-953	72.4260.05	(H) LE259-093	72.4260.01
(H) LE159-245	72.4259.02	LE259-954	72.4260.05	(H) LE259-096	72.4260.01
(H) LE159-390	72.4259.06	(H) LE259-937	72.4260.05	LE359-371	72.5190.06
(H) LE159-313	72.4259.01	(H) LE259-938	72.4260.05	LE359-372	72.5190.06
(H) LE159-308	72.4259.01	HLE259-903	72.4260.05	LE359-393	72.5190.06
(H) LE159-320	72.4259.01	HLE259-904	72.4260.05	LE359-394	72.5190.06
(H) LE159-330	72.4259.01	LE259-905	72.4260.02	LE359-361	72.5190.06
(H) LE159-351	72.4259.01	LE259-906	72.4260.02	LE359-362	72.5190.06
(H) LE159-328	72.4259.01	LE259-943	72.4260.02	LE359-601	72.5190.06
(H) LE159-321	72.4259.01	LE259-944	72.4260.02	LE359-602	72.5190.06
(H) LE159-331	72.4259.01	(H) LE259-927	72.4260.02	LE359-607	72.5190.06
(H) LE159-317	72.4259.01	(H) LE259-928	72.4260.02	LE359-608	72.5190.06
(H) LE159-338	72.4259.01	HLE259-905	72.4260.02	LE359-365	72.5190.06
(H) LE159-322	72.4259.01	HLE259-906	72.4260.02	LE359-366	72.5190.06
(H) LE159-332	72.4259.01	LE259-907	72.4260.04	LE359-613	72.5190.06
(H) LE159-315	72.4259.01	LE259-908	72.4260.04	LE359-614	72.5190.06
(H) LE159-348	72.4259.01	LE259-951	72.4260.04	LE359-300	72.5190.06
(H) LE159-323	72.4259.01	LE259-952	72.4260.04	LE359-301	72.5190.06
(H) LE159-333	72.4259.01	(H) LE259-935	72.4260.04	LE359-304	72.5190.06
(H) LE159-170	72.4259.01	(H) LE259-936	72.4260.04	LE359-305	72.5190.06
(H) LE159-169	72.4259.01	HLE259-907	72.4260.04	LE359-308	72.5190.06
(H) LE159-490	72.4259.01	(H) LE 249-491	72.5189.01		
(H) LE249-200	72.5189.05	HLE259-908	72.4260.04	LE359-309	72.5190.06
(H) LE249-204	72.5189.05	LE259-550	72.4260.03	LE359-312	72.5190.06
(H) LE249-216	72.5189.05	LE259-551	72.4260.03	LE359-313	72.5190.06
(H) LE249-220	72.5189.05	LE259-558	72.4260.03	LE359-316	72.5190.06
(H) LE249-208	72.5189.03	LE259-559	72.4260.03	LE359-317	72.5190.06
(H) LE249-212	72.5189.03	(H) LE259-566	72.4260.03	LE359-302	72.5190.06
(H) LE249-224	72.5189.03	(H) LE259-567	72.4260.03	LE359-303	72.5190.06
(H) LE249-228	72.5189.03	HLE259-550	72.4260.03	LE359-306	72.5190.06
(H) LE249-199	72.5189.04	HLE259-551	72.4260.03	LE359-307	72.5190.06
(H) LE249-203	72.5189.04	LE259-552	72.4260.05	LE359-310	72.5190.06
(H) LE249-215	72.5189.04	LE259-553	72.4260.05	L3359-311	72.5190.06
(H) LE249-219	72.5189.04	LE259-560	72.4260.05	LE359-314	72.5190.06
(H) LE249-207	72.5189.02	LE259-561	72.4260.05	LE359-315	72.5190.06
(H) LE249-211	72.5189.02	(H) LE259-568	72.4260.05	LE359-318	72.5190.06
(H) LE249-223	72.5189.02	(H) LE259-569	72.4260.05	LE359-319	72.5190.06
LE359-379	72.5190.05	LE459-540	72.4260.01 + 72.4260.03	HCI158-106	72.4353.01
LE359-380	72.5190.05	LE459-541	72.4260.01 + 72.4260.03	HCI158-107	72.4353.01
LE359-401	72.5190.05	LE459-548	72.4260.01 + 72.4260.03	CI158-150	72.4353.01
LE359-402	72.5190.05	LE459-549	72.4260.01 + 72.4260.03	CI158-151	72.4353.01

globalgastroparts.com - szervizaruhaz.hu

LE359-383	72.5190.03	LE459-556	72.4260.01 + 72.4260.03	HCI158-150	72.4353.01
LE359-384	72.5190.03	LE459-557	72.4260.01 + 72.4260.03	HCI158-151	72.4353.01
LE359-405	72.5190.03	LE459-534	72.4260.04 + 72.4260.06	(H) CE158-121	72.4353.01
LE359-406	72.5190.03	LE459-535	72.4260.04 + 72.4260.06	(H) CE158-125	72.4353.01
LE359-377	72.5190.04	LE459-542	72.4260.04 + 72.4260.06	(H) CE158-122	72.4353.01
LE359-378	72.5190.04	LE459-543	72.4260.04 + 72.4260.06	(H) CE158-126	72.4353.01
LE359-399	72.5190.04	LE459-550	72.4260.04 + 72.4260.06	(H) CE158-131	72.4353.01
LE359-400	72.5190.04	LE459-551	72.4260.04 + 72.4260.06	(H) CE158-135	72.4353.01
LE359-381	72.5190.02	LE459-558	72.4260.04 + 72.4260.06	(H) CE158-132	72.4353.01
LE359-382	72.5190.02	LE459-559	72.4260.04 + 72.4260.06	(H) CE158-136	72.4353.01
LE359-403	72.5190.02	LE459-536	72.4260.01 + 72.4260.02	(H) CE158-262	72.4353.05
LE359-404	72.5190.02	LE459-537	72.4260.01 + 72.4260.02	(H) CE158-264	72.4353.05
LK359-531	72.5190.05	LE459-544	72.4260.01 + 72.4260.02	(H) CE158-232	72.4353.05
LK359-532	72.5190.05	LE459-545	72.4260.01 + 72.4260.02	(H) CE158-233	72.4353.05
LK359-539	72.5190.05	LE459-552	72.4260.01 + 72.4260.02	(H) CE158-252	72.4353.03
LK359-540	72.5190.05	LE459-553	72.4260.01 + 72.4260.02	(H) CE158-254	72.4353.03
LK359-523	72.5190.05	LE459-560	72.4260.01 + 72.4260.02	(H) CE158-242	72.4353.03
LK359-524	72.5190.05	LE459-561	72.4260.01 + 72.4260.02	(H) CE158-243	72.4353.03
LK359-945	72.5190.05	LK459-917	72.4260.03 + 72.4260.05	(H) CE158-261	72.4353.04
LK359-946	72.5190.05	LK459-918	72.4260.03 + 72.4260.05	(H) CE158-263	72.4353.04
LK359-953	72.5190.05	LK459-621	72.4260.03 + 72.4260.05	(H) CE158-231	72.4353.04
LK359-954	72.5190.05	LK459-622	72.4260.03 + 72.4260.05	(H) CE158-230	72.4353.04
LK359-535	72.5190.03	LK459-589	72.4260.03 + 72.4260.05	(H) CE158-251	72.4353.02
LK359-536	72.5190.03	LK459-590	72.4260.03 + 72.4260.05	(H) CE158-253	72.4353.02
LK359-543	72.5190.03	LK459-557	72.4260.03 + 72.4260.05	(H) CE158-241	72.4353.02
LK359-544	72.5190.03	LK459-558	72.4260.03 + 72.4260.05	(H) CE158-240	72.4353.02
		(H) CE248-493	72.4352.01	(H) CE158-492	72.4353.01
LK359-527	72.5190.03	LK459-933	72.4260.03 + 72.4260.05	CE148-000	72.5186.06
LK359-528	72.5190.03	LK459-934	72.4260.03 + 72.4260.05	CE148-002	72.5186.06
LK359-949	72.5190.03	LK459-637	72.4260.03 + 72.4260.05	HCE148-000	72.5186.06
LK359-950	72.5190.03	LK459-638	72.4260.03 + 72.4260.05	HCE148-002	72.5186.06
LK359-957	72.5190.03	LK459-605	72.4260.03 + 72.4260.05	CG148-001	72.5186.07
LK359-958	72.5190.03	LK459-606	72.4260.03 + 72.4260.05	CG148-003	72.5186.07
LG359-885	72.5190.05	LK459-573	72.4260.03 + 72.4260.05	HCG148-001	72.5186.07
LG359-886	72.5190.05	LK459-574	72.4260.03 + 72.4260.05	HCG148-003	72.5186.07
LK359-877	72.5190.05	LK459-913	72.4260.03 + 72.4260.04	(H) CE128-100	72.5185
LK359-878	72.5190.05	LK459-914	72.4260.03 + 72.4260.04	(H) CE128-103	72.5185
LK359-961	72.5190.05	LK459-617	72.4260.03 + 72.4260.04	(H) CE128-104	72.5185
LK359-962	72.5190.05	LK459-618	72.4260.03 + 72.4260.04	(H) CE158-169	72.4353.01
LK359-965	72.5190.05	LK459-585	72.4260.03 + 72.4260.04	CE248-105	72.4352.06
LK359-966	72.5190.05	LK459-586	72.4260.03 + 72.4260.04	CE248-106	72.4352.06
LG359-901	72.5190.05	LK459-553	72.4260.03 + 72.4260.04	HCE248-105	72.4352.06
LG359-902	72.5190.05	LK459-554	72.4260.03 + 72.4260.04	HCE248-106	72.4352.06
LK359-977	72.5190.05	LK459-929	72.4260.02 + 72.4260.05	(H) CE248-125	72.4352.06
LK359-978	72.5190.05	LK459-930	72.4260.02 + 72.4260.05	(H) CE248-126	72.4352.06
LE459-961	72.4260.05 + 72.4260.06	LK459-633	72.4260.02 + 72.4260.05	(H) CE248-101	72.4352.06
LE459-962	72.4260.05 + 72.4260.06	LK459-634	72.4260.02 + 72.4260.05	(H) CE248-102	72.4352.06
LE459-495	72.4260.05 + 72.4260.06	LK459-601	72.4260.02 + 72.4260.05	CE248-117	72.4352.06
LE459-496	72.4260.05 + 72.4260.06	LK459-602	72.4260.02 + 72.4260.05	CE248-118	72.4352.06
LE459-463	72.4260.05 + 72.4260.06	LK459-569	72.4260.02 + 72.4260.05	HCE248-117	72.4352.06
LE459-464	72.4260.05 + 72.4260.06	LK459-570	72.4260.02 + 72.4260.05	HCE248-118	72.4352.06
LE459-439	72.4260.05 + 72.4260.06	(H) Te49	72.4746.02	(H) CE248-155	72.4352.06
LE459-440	72.4260.05 + 72.4260.06	(H) Td49	72.4746.02	(H) CE248-156	72.4352.06
LE459-969	72.4260.01 + 72.4260.03	(H) Te59	72.4259.01	(H) CE248-107	72.4352.06
LE459-970	72.4260.01 + 72.4260.03	(H) Td59	72.4259.01	(H) CE248-108	72.4352.06
LE459-511	72.4260.01 + 72.4260.03	(H) Te69	72.4746.03	CE248-115	72.4352.01
LE459-512	72.4260.01 + 72.4260.03	(H) Td69	72.4746.03	CE248-116	72.4352.01
LE459-479	72.4260.01 + 72.4260.03	(H) Te79	72.4746.04	HCE248-115	72.4352.01
LE459-480	72.4260.01 + 72.4260.03	(H) Td79	72.4746.04	HCE248-116	72.4352.01
LE459-443	72.4260.01 + 72.4260.03	(H) Te89	72.5189.01	(H) CE248-127	72.4352.01
LE459-444	72.4260.01 + 72.4260.03	(H) Td89	72.5189.01	(H) CE248-128	72.4352.01
LE459-959	72.4260.04 + 72.4260.06	(H) Te99	72.4746.05	(H) CE248-111	72.4352.01
LE459-960	72.4260.04 + 72.4260.06	(H) Td99	72.4746.05	(H) CE248-112	72.4352.01
LE459-493	72.4260.04 + 72.4260.06	(H) Te109	72.4260.01	CI248-135	72.4352.01
LE459-494	72.4260.04 + 72.4260.06	(H) Td109	72.4260.01	CI248-136	72.4352.01
LE459-461	72.4260.04 + 72.4260.06	(H) Te79 WPE-C5	72.4746.04	HCI248-135	72.4352.01
LE459-462	72.4260.04 + 72.4260.06	(H) Td79 WPE-C5	72.4746.04	HCI248-136	72.4352.01
LE459-437	72.4260.04 + 72.4260.06	(H) Te89 WPE-C8	72.5189.01	CG248-201	72.4352.08
LE459-438	72.4260.04 + 72.4260.06	(H) Td89 WPE-C8	72.5189.01	CG248-203	72.4352.08
LE459-967	72.4260.01 + 72.4260.02	(H) Te99 WPE-C8	72.4746.05	HCG248-201	72.4352.08
LE459-968	72.4260.01 + 72.4260.02	(H) Td99 WPE-C8	72.4746.05	HCG248-203	72.4352.08
LE459-509	72.4260.01 + 72.4260.02	(H) Te109 WPE-C8	72.4260.01	(H) CK248-205	72.4352.07
LE459-510	72.4260.01 + 72.4260.02	(H) Td109 WPE-C8	72.4260.01	(H) CK248-207	72.4352.07
LE459-477	72.4260.01 + 72.4260.02	(H) CE158-140	72.4353.06	(H) CK248-209	72.4352.07
LE459-478	72.4260.01 + 72.4260.02	(H) CE158-141	72.4353.06	(H) CK248-211	72.4352.07
LE459-441	72.4260.01 + 72.4260.02	(H) CE158-142	72.4353.06	CK248-221	72.4352.07
LE459-442	72.4260.01 + 72.4260.02	(H) CE158-143	72.4353.06	CK248-222	72.4352.07
LE459-530	72.4260.05 + 72.4260.06	(H) CE158-100	72.4353.01	HCK248-221	72.4352.07
LE459-531	72.4260.05 + 72.4260.06	(H) CE158-101	72.4353.01	HCK248-222	72.4352.07
LE459-538	72.4260.05 + 72.4260.06	(H) CE158-102	72.4353.01	(H) CK248-225	72.4352.07
LE459-539	72.4260.05 + 72.4260.06	(H) CE158-103	72.4353.01	(H) CK248-226	72.4352.07
LE459-546	72.4260.05 + 72.4260.06	CI158-104	72.4353.01	(H) CK248-231	72.4352.07
LE459-547	72.4260.05 + 72.4260.06	CI158-105	72.4353.01	(H) CK248-232	72.4352.07
LE459-554	72.4260.05 + 72.4260.06	HCI158-104	72.4353.01	CK248-223	72.4352.07
LE459-555	72.4260.05 + 72.4260.06	HCI158-105	72.4353.01	CK248-224	72.4352.07
LE459-532	72.4260.01 + 72.4260.03	CI158-106	72.4353.01	HCK248-223	72.4352.07
LE459-533	72.4260.01 + 72.4260.03	CI158-107	72.4353.01	HCK248-224	72.4352.07
(H) CK248-227	72.4352.03				
(H) CK248-228	72.4352.03				

globalgastroparts.com - szervizaruhaz.hu

(H) CK248-233	72.4352.07	SLE159-341	72.4259.01
(H) CK248-234	72.4352.07	SLE159-361	72.4259.01
CE258-001	72.5187.03	SLI159-371	72.4259.01
CE258-002	72.5187.03	SLI159-373	72.4259.01
CE258-011	72.5187.03	SLE159-251	72.4259.03
CE258-012	72.5187.03	SLE159-261	72.4259.05
(H) CE258-021	72.5187.03	SLE159-390	72.4259.06
(H) CE258-022	72.5187.03	SLE159-313	72.4259.01
HCE258-001	72.5187.03	SLE159-351	72.4259.01
HCE258-002	72.5187.03	SLE159-170	72.4259.01
CE258-003	72.5187.05	SLE259-345	72.4260.01
CE258-004	72.5187.05	SLE259-343	72.4260.01
CE258-013	72.5187.05	SLI259-375	72.4260.01
CE258-014	72.5187.05		
(H) CE258-023	72.5187.05		
(H) CE258-024	72.5187.05		
HCE258-003	72.5187.05		
HCE258-004	72.5187.05		
CE258-005	72.5187.02		
CE258-006	72.5187.02		
CE258-015	72.5187.02		
CE258-016	72.5187.02		
(H) CE258-025	72.5187.02		
(H) CE258-026	72.5187.02		
HCE258-005	72.5187.02		
HCE258-006	72.5187.02		
CE258-007	72.5187.04		
CE258-008	72.5187.04		
CE258-017	72.5187.04		
CE258-018	72.5187.04		
(H) CE258-027	72.5187.04		
(H) CE258-028	72.5187.04		
HCE258-007	72.5187.04		
HCE258-008	72.5187.04		
CE258-031	72.5187.03		
CE258-032	72.5187.03		
CE258-041	72.5187.03		
CE258-042	72.5187.03		
(H) CE258-051	72.5187.03		
(H) CE258-052	72.5187.03		
HCE258-031	72.5187.03		
HCE258-032	72.5187.03		
CE258-033	72.5187.05		
CE258-034	72.5187.05		
CE258-043	72.5187.05		
CE258-044	72.5187.05		
(H) CE258-053	72.5187.05		
(H) CE258-054	72.5187.05		
HCE258-033	72.5187.05		
HCE258-034	72.5187.05		
CE258-035	72.5187.02		
CE258-036	72.5187.02		
CE258-045	72.5187.02		
CE258-046	72.5187.02		
(H) CE258-055	72.5187.02		
(H) CE258-056	72.5187.02		
HCE258-035	72.5187.02		
HCE258-036	72.5187.02		
CE258-037	72.5187.04		
CE258-038	72.5187.04		
CE258-047	72.5187.04		
CE258-048	72.5187.04		
(H) CE258-057	72.5187.04		
(H) CE258-058	72.5187.04		
HCE258-037	72.5187.04		
HCE258-038	72.5187.04		
(H) Te48	72.5186.01		
(H) Td48	72.5186.01		
(H) Te58	72.4353.01		
(H) Td58	72.4353.01		
(H) Te68	72.4746.07		
(H) Td68	72.4746.07		
(H) Te78	72.4746.08		
(H) Td78	72.4746.08		
(H) Te88	72.4352.01		
(H) Td88	72.4352.01		
(H) Te98	72.4746.09		
(H) Td98	72.4746.09		
(H) Te108	72.4746.10		
(H) Td108	72.4746.10		
(H) Te78 WPE-C5	72.4746.08		
(H) Td78 WPE-C5	72.4746.08		
(H) Te88 WPE-C5	72.4352.01		
(H) Td88 WPE-C5	72.4352.01		
(H) Te98 WPE-C5	72.4746.09		
(H) Td98 WPE-C5	72.4746.09		
(H) Te108 WPE-C8	72.4746.10		
(H) TE108 WPE-C8	72.4746.10		

globalgastroparts.com - szervizeruhaz.hu

Compact 72.3780.12
Large 72.3090.12
Large 72.3090.13
12.12.94

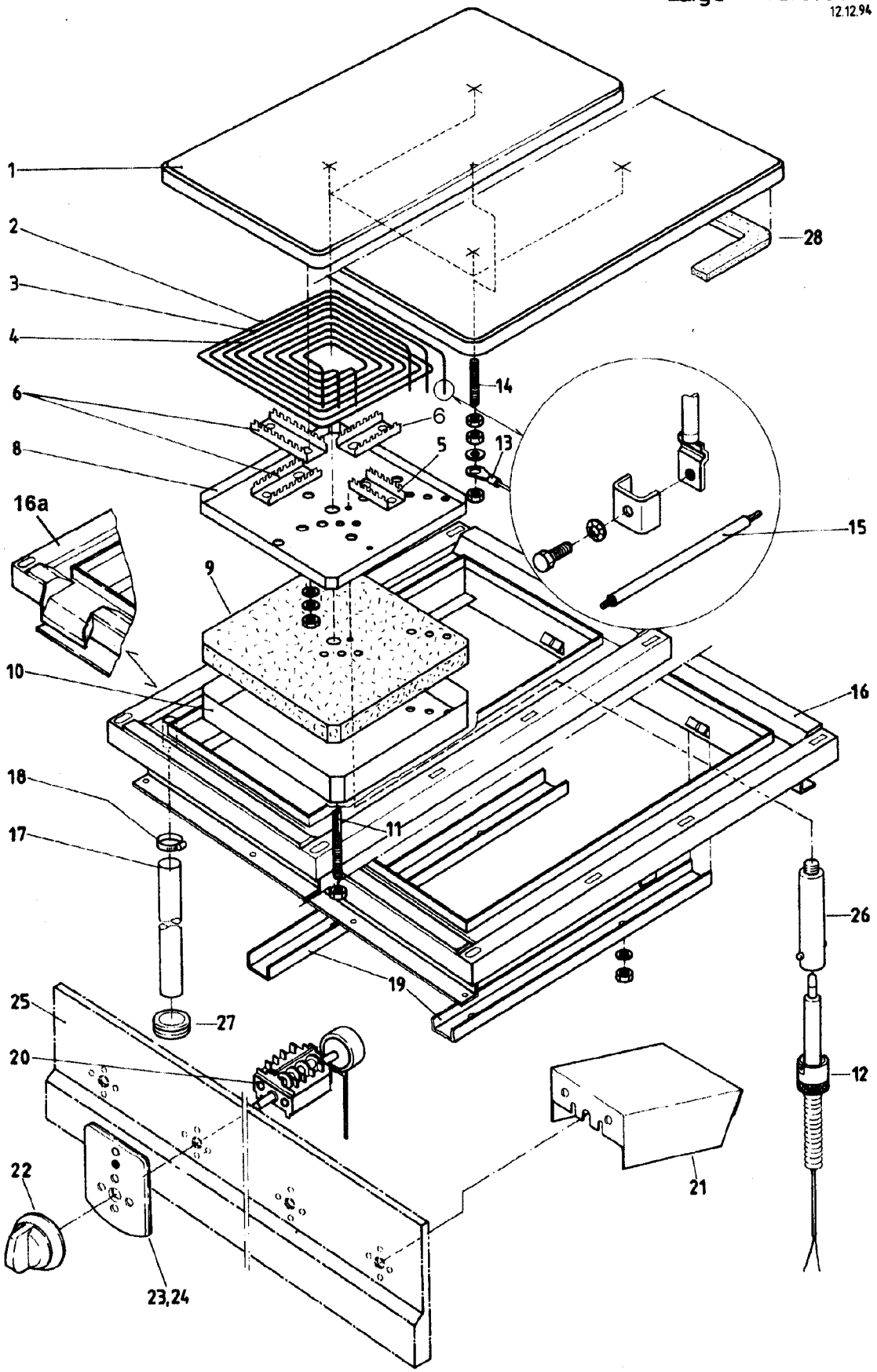

globalgastroparts.com - szervizaruhaz.hu

			unità piastra MS	unit MS plate								Large 72.3090.12 1/2 17.12.96
Pos.	Produkt Nr.	Service Nr.	designatione	designation		MS92	MSE92	MS94	MSE94	MS52	MSE52	Intro.
1	72.2436		piastra	plate		1						
	72.2437		piastra	plate			1					
	72.0349.02	72.0349.02KD	piastra	plate				1				
	72.0349.04		piastra	plate					1			
	72.0349.01		piastra	plate						1		
	72.0349.03		piastra	plate							1	
	72.6885.01		piastra	plate		1						07/01
	72.6885.02		piastra	plate			1					07/01
	72.6728.01		piastra	plate				1				07/01
	72.6728.02		piastra	plate					1			07/01
	72.6886.01		piastra	plate						1		07/01
	72.6886.02		piastra	plate							1	07/01
2	72.0484.21		asta di riscaldamento	rod heater	230V 1505W	2	2	4	4	2	2	
	72.0484.22	1 800 2164	asta di riscaldamento	rod heater	400V 1505W							
	72.0484.23		asta di riscaldamento	rod heater	415V 1505W							
	72.0484.24		asta di riscaldamento	rod heater	440V 1505W							
	72.0484.26		asta di riscaldamento	rod heater	200V 1505W							
3	72.0484.11		asta di riscaldamento	rod heater	230V 1335W	2	2	4	4	2	2	
	72.0484.12	1 800 2165	asta di riscaldamento	rod heater	400V 1335W							
	72.0484.13		asta di riscaldamento	rod heater	415V 1335W							
	72.0484.14		asta di riscaldamento	rod heater	440V 1335W							
	72.0484.16		asta di riscaldamento	rod heater	200V 1335W							
4	72.0484.01		asta di riscaldamento	rod heater	230V 1160W	2	2	4	4	2	2	
	72.0484.02	1 800 2166	asta di riscaldamento	rod heater	400V 1160W							
	72.0484.03		asta di riscaldamento	rod heater	415V 1160W							
	72.0484.04		asta di riscaldamento	rod heater	440V 1160W							
	72.0484.06		asta di riscaldamento	rod heater	200V 1160W							
2a - 4a	72.5055.01		asta di riscaldamento	rod heater	230V 1160W	2	2	4	4	2	2	07/01
	72.5055.02		asta di riscaldamento	rod heater	400V 1160W							
	72.5055.03		asta di riscaldamento	rod heater	415V 1160W							
	72.5055.04		asta di riscaldamento	rod heater	440V 1160W							
	72.5055.05		asta di riscaldamento	rod heater	200V 1160W							
5	72.0251.01		sostegno	support		2	2	4	4	2	2	
6	72.0251.02		sostegno	support		6	6	12	12	6	6	
	72.6729		sostegno	support		6	6	12	12	6	6	07/01
8	72.0355		lamiera rifrattiva	heat deflector plate		2	2	4	4	2	2	
	72.6726		lamiera rifrattiva	heat deflector plate		2	2	4	4	2	2	07/01

globalgastroparts.com - szervizaruhaz.hu

Pos.	Produkt Nr.	Service Nr.	designatione	designation		MS92	MSE92	MS94	MSE94	MS52	MSE52	Intro.
9	72.0350		isolazione	insulation		2	2	4	4	2	2	
	72.6724		isolazione	insulation		2	2	4	4	2	2	07/01
10	72.0356		copertura, rivestimento	casing		2	2	4	4	2	2	
	72.6725		copertura, rivestimento	casing		2	2	4	4	2	2	07/01
11	72.0343		spina con filetto	threaded pin	M8x100	2	2	4	4	2	2	
12	75.0008.02	1 802 5415	sensore di temperatura	temperature sensor		2	2	4	4	2	2	
	72.6302	1802 5564	sensore di temperatura	temperature sensor	ALCE	2	2	4	4	2	2	07/01
13	72.0412.08		testa di cavo	cable shoe		1	1	1	1	1	1	
14	1 701 5527		bolzone con filetto	threaded bolt	M6x80	1	1	1	1	1	1	
15	72.0516		cavetto compl.	strand compl.		8	8	16	16	8	8	
16	72.2610		copertura	cover		1	1					
	72.2362		copertura	cover			1	1				
	72.2358		copertura	cover					1	1		
16a	72.4509		copertura	cover	Marine	1						
	72.4227		copertura	cover	Marine			1				
17	1 115 1417		tubo di scarico	drain tube		1	1	1	1	1	1	
18	12.9827		brida	shackle		1	1	1	1	1	1	
19	72.0334		archetto di tensione	tension clamp		1	1	2	2	1	1	
20	72.0006.01	1802 5422	interruttore	interruptor		2	2	4	4	2	2	
	72.6355.01		interruttore ALCE	interruptor ALCE	L=2,8m	2	2	4	4	2	2	07/01
21	72.2438		lamiera di copertura	cover panel		2	2	4	4	2	2	
	72.5065		lamiera di copertura	cover panel		2	2	4	4	2	2	07/01
22	72.2254.01	1900 6114	manetta	knob		2	2	4	4	2	2	
	72.5056		manetta ALCE	ALCE knob		2	2	4	4	2	2	07/01
23	72.2213	1900 6954	placca, davanti	plate, front		1/2	1/2	2/4	2/4	1/2	1/2	
	72.6390		placca, davanti	plate, front	Electrolux	1/2	1/2	2/4	2/4		1/2	07/00
23a	72.3179		placca	plate	Silver / ALEX							07/94
	72.6794		placca	plate	Grey / ALEX							05/01
24	72.2214	1900 6955	placca, dietro	plate, back		1	1	2	2	1	1	
	72.6391		placca, dietro	plate, back	Electrolux	1	1	2	2	1	1	09/00
25	(*) 72.3090.99		lamiera frontale	front panel								
26	75.9013.04		sostegno di sensore	sensor support		2	2	4	4	2	2	
27	712 044 961.17		beccuccio	socket	∅30	1	1	1	1			
28	1201 1947		nastro di guarnizione	washer band	10x4	%	%	%	%	%	%	
	(*)		vedere	see								

globalgastroparts.com - szervizaruhaz.hu

			unità piastra MS	unit MS plate		Large 72.3090.13 1/2 10.4.1995	
Pos.	Produkt Nr.	Service Nr.	designatione	designation		MS96	MSE96
1	72.0349.01		piastra	plate		1	
	72.0349.02		piastra	plate		1	
	72.0349.03		piastra	plate			1
	72.0349.04		piastra	plate			1
2	72.0484.21		asta di riscaldamento	rod heater	230V 4kW	6	6
	72.0484.22	1 800 2164	asta di riscaldamento	rod heater	400V 4kW		
	72.0484.23		asta di riscaldamento	rod heater	415V 4kW		
	72.0484.24		asta di riscaldamento	rod heater	440V 4kW		
	72.0484.26		asta di riscaldamento	rod heater	200V 4kW		
3	72.0484.11		asta di riscaldamento	rod heater	230V 4kW	6	6
	72.0484.12	1 800 2165	asta di riscaldamento	rod heater	400V 4kW		
	72.0484.13		asta di riscaldamento	rod heater	415V 4kW		
	72.0484.14		asta di riscaldamento	rod heater	440V 4kW		
	72.0484.16		asta di riscaldamento	rod heater	200V 4kW		
4	72.0484.01		asta di riscaldamento	rod heater	230V 4kW	6	6
	72.0484.02	1 800 2166	asta di riscaldamento	rod heater	400V 4kW		
	72.0484.03		asta di riscaldamento	rod heater	415V 4kW		
	72.0484.04		asta di riscaldamento	rod heater	440V 4kW		
	72.0484.06		asta di riscaldamento	rod heater	200V 4kW		
5	72.0251.01					6	6
6	72.0251.02					18	18
8	72.0355		lamiera rifrattiva	heat deflector plate		6	6
9	72.0350		isolazione	insulation		6	6
10	72.0356		copertura, rivestimento	casing		6	6
11	72.0343		spina con filetto	threaded pin	M8x100	6	6
12	75.0008	1 802 5409	sensore di temperatura	temperature sensor		6	6
13	72.0412.08		testa di cavo	cable shoe		2	2
14	1 701 5527		bolzone con filetto	threaded bolt	M6x80	2	2
15	72.0516		cavetto compl.	strand compl.		24	24
16	72.2358		copertura	cover		1	1
16a	72.3719		copertura	cover	Marine	1	
17	1 115 1417		tubo di scarico	drain tube		2	2
18	12.9827		brida	shackle		2	2
19	72.0334		archetto di tensione	tension clamp		3	3
20	72.0006.01	1 802 5422	interruttore	interruptor		6	6
21	72.2438		lamiera di copertura	cover panel		6	6

globalgastroparts.com - szervizaruhaz.hu

Pos.	Produkt Nr.	Service Nr.	designatione	designation		Introd.	MS96	MSE96
22	72.2254.01	1900 6114	manetta	knob			6	6
23	72.2213	1900 6954	placca, davanti	plate, front			3-6	3-6
	72.6390		placca, davanti	plate, front	Electrolux	09.00	3-6	3-6
23a	72.3179		placca	plate	silver/ALEX	09.94		
	72.6794		placca	plate	grey/ALEX	05.01		
24	72.2214	1900 6955	placca, dietro	plate, back			0-3	0-3
	72.6391		placca, dietro	plate, back	Electrolux	09.00	0-3	0-3
25	(*) 72.3090.99		lamiera frontale	front panel			1-2	1-2
26	75.9013.04		sostegno di sensore	sensor support			6	6

(*) vedere see

globalgastroparts.com - szervizkonyv.hu

Compact 72.3780.14
Large 72.3090.14
28.02.96

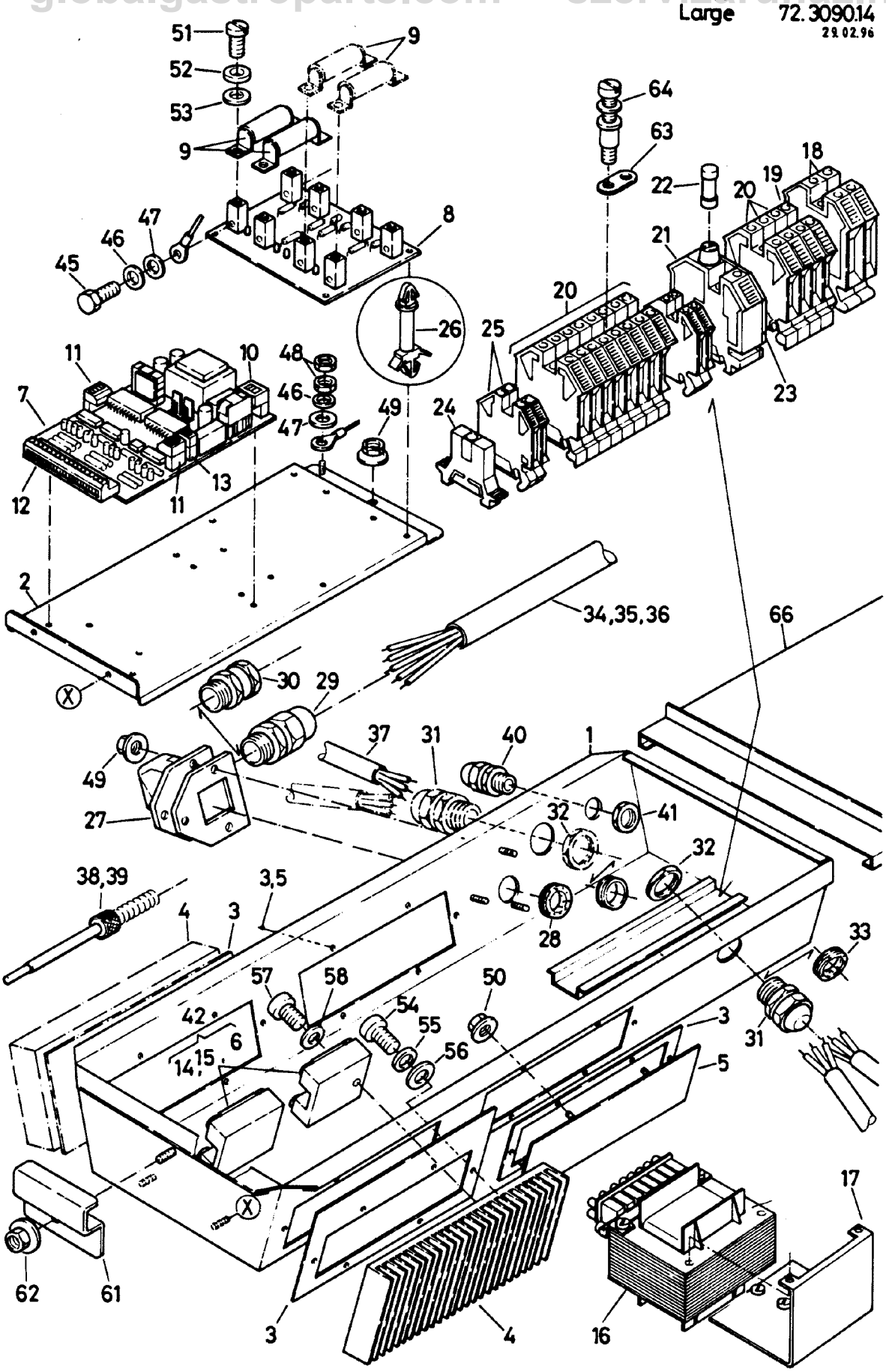

globalgastroparts.com - szervizaruhaz.hu

			unità cassetto MS	unit MS drawer		Compact 72.3780.14 Large 72.3090.14 1 15.3.96	
Pos.	Produkt Nr.	Service Nr.	designatione	designation		148/159	248/259
1	72.1658		cassetto	drawer		1	1
2	72.1757		lamiera	sheet		1	1
3	72.0981	1802 5442	guarnizione	washer		4	4
4	72.0983		elemento di refrigeraz.	cooling block		2	4
5	72.1724		lamiera	sheet		2	
6	72.1131	1802 5431	relè	relay		2	4
7	72.1657	1802 5432	print di regolatore	control print		1	1
8	72.1656	1802 5433	print di fusibili	fuse print		1	1
9	72.1730	1802 5434	fusibile	fuse	25A/FF	2	4
10	1115 1378		morsa	clamp		1	1
11	1115 1379		morsa	clamp		1	1
12	1115 1380		morsa	clamp		1	1
13	1115 1381		morsa	clamp		1	1
14	72.1492.03	1802 5436	cavo	cable		1	
15	72.1492.04		cavo	cable		1	2
16	70.1371	1802 5441	trasformatore	transformer		1	1
17	72.1758		lamiera	sheet		1	1
18	75.2011.02		morsa	clamp		2	2
19	75.2010.31	1800 0875	morsa	clamp		1	1
20	75.2010.30	1800 0872	morsa	clamp		11	11
21	75.2012.01	1800 0857	morsa	clamp		1	1
22	712 344 362.03	1801 3703	fusibile	fuse	3,15A/FST	1	1
23	75.2012.02	1800 0876	parete	wall		1	1
24	75.2013		arresto	stopper		1	1
25	75.2010.20	1800 0870	morsa	clamp		2	2
26	75.5000.05	1901 6162	pezzo di distanza	spacer part		8	8
27	75.2007		flangia	flange		1	1
28	712 044 961.15		beccuccio	socket		1	1
29	12.5867		collegamento	fitting	PG21	1	1
30	1115 1392		tamburo	stuffing box	PG21	1	1
31	1117 1195		collegamento	fitting	PG16	2	2
32	1115 1297		dado	nut	PG16	2	2
33	72.0593.04		beccuccio	socket	DG16	1	1

globalgastroparts.com - szervizaruhaz.hu

			unità cassetto MS	unit MS drawer		Compact 72.3780.14 Large 72.3090.14 2 15.3.96	
Pos.	Produkt Nr.	Service Nr.	designatione	designation		148/159	248/259
34	72.1721.01		cavo	cable	4x6mm²	1	1
35	72.1721.03		cavo	cable	5x6mm²	1	1
36	72.1721.02		cavo	cable	4x10mm²	1	1
37	72.1798		cavetto	strand	2.5mm²	2	2
38	75.0008.02	1802 5415	sensore	sensor		2	4
39	75.9013.01	1802 5413	protezione	protection		2	4
40	1117 1194		collegamento	fitting	PG11	1	1
41	1103 1530		dado	nut	PG11	1	1
42	72.3431		relè	relay		1	1
45	1701 2063		vite	screw	M6x10	4	8
46	1701 5007		anello di molla	spring ring	M6	5	9
47	1701 4003		rondella	disk	M6	5	9
48	1701 3016		dado	nut	M6	2	2
49	712 044 120.05	1101 8576	dado	nut	M5	4	4
50	712 044 120.04		dado	nut	M4	12	18
51	1701 2507		vite	screw	M5x10	4	8
52	1701 7002		disco	disk	M5	4	8
53	1701 3535		rondella	disk	M5	4	8
54	1701 2021		vite	screw	M4x10	20	40
55	1701 5002		anello di molla	spring ring	M4	20	40
56	1701 3502		rondella	disk	M4	20	40
57	1701 2503		vite	screw	M4x8	4	8
58	1701 7060		disco	disk	M4	4	8
61	72.0967		archetto	clamp		1	1
62	712 044 120.06	1101 8577	dado	nut	M8	1	1
63	75.2010.34		coprigiunto	latch		3	3
64	71.7066.90		bolzone	bolt		3	3
66	72.2899		guida	guide		1	
	72.2898		guida	guide			1

globalgastroparts.com - szervizarubaz.hu

Compact 72.3780.14 a
Large 72.3090.14 a
01.08.97

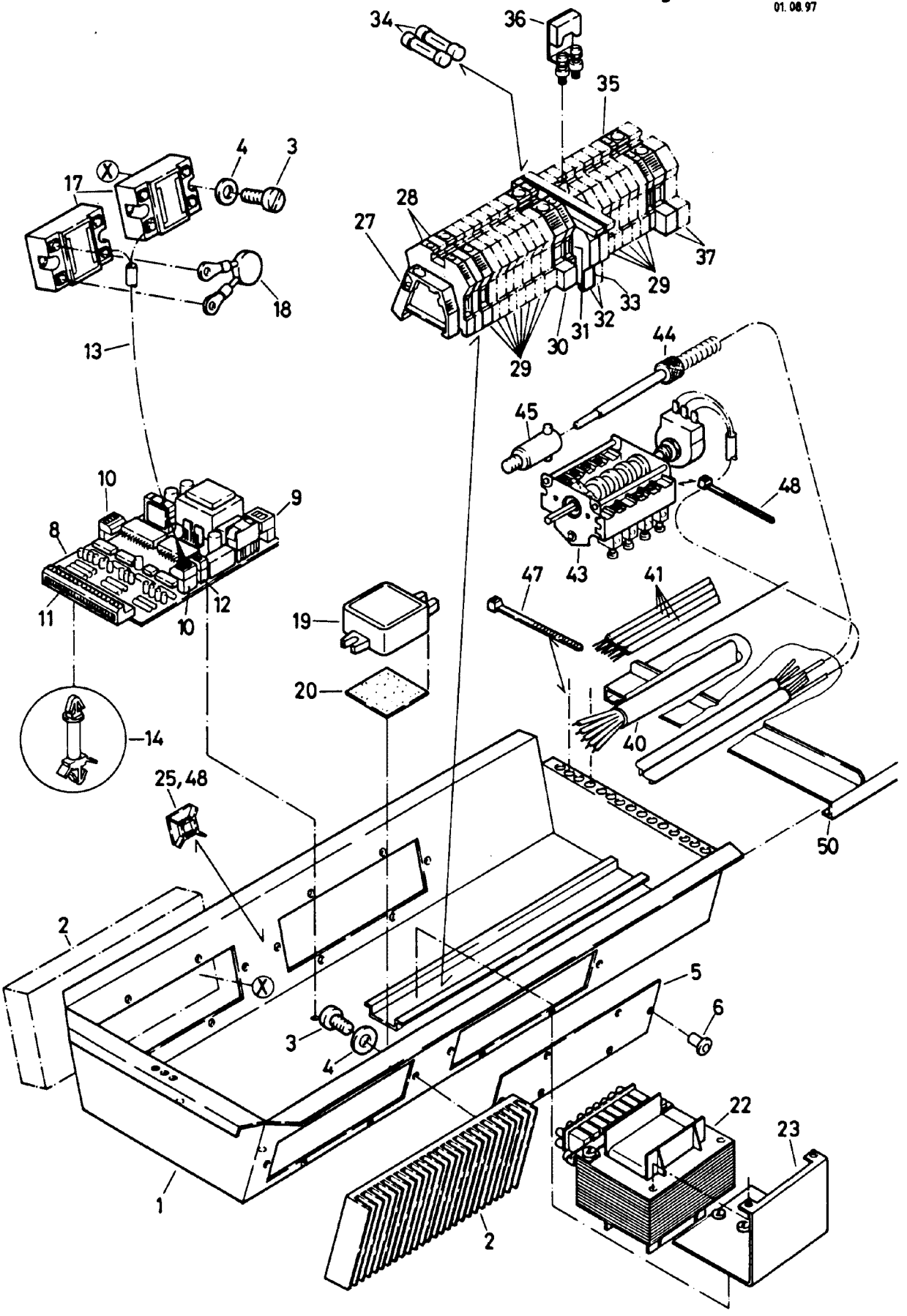

globalgastroparts.com - szervizaruhaz.hu

			unità cassetto MS	unit MS drawer		Compact 72.3780.14a Large 72.3090.14a 1 1.8.97	
Pos.	Produkt Nr.	Service Nr.	designatione	designation		148/159	248/259
1	72.4554		cassetto	drawer		1	1
2	70.0983		elemento di refrigeraz.	cooling block	PR165	1	2/4
3	1701 2021		vite	screw	M4x10	20	40
4	1701 7060		disco	disk	M4	20	40
5	72.1724		lamiera	sheet		3	2
6	1701 1093		rivetta	rivet	∅4.8x9	36	12
8	72.4956	1802 5580	print	print		1	1
9	1115 1378	1802 5435	morsa	clamp		1	1
10	1115 1379		morsa	clamp		2	2
11	1115 1380	1802 5437	morsa	clamp		1	1
12	1115 1381	1802 5438	morsa	clamp		1	1
13	72.1492.03	1802 5436	cavo	cable	404-440V	1	2
	72.1492.04	1802 5440	cavo	cable	200-230V	1	2
14	75.5000.05	1901 6162	sostegno	support		4	4
17	72.1131	1802 5431	relè	relay	HD4850	2	4
18	72.3431	1802 5581	varistore	varistor	MOV510	2	4
19	72.4607	1802 5582	filtro di rete	supply filter	3F20-4	1	1
20	72.1444		nastro adesivo	adhesive strip	5cm	1	1
22	70.1371	1802 5441	trasformatore	transformer	200-440V	1	1
23	72.1758		sostegno	support		1	1
25	1115 1283		piastra	plate		2	2
27	75.2013		arresto	stopper		1	1
28	75.2010.20		morsa	clamp	RK2,5-4PA	2	2
29	75.2010.30		morsa	clamp	PK6-10PA	7/9	11/14
30	75.2011.01		morsa	clamp	SL4/35	1	1
31	75.2010.21		morsa	clamp	PK2,5-4PA	1	1
32	75.2012.01	1802 5573	morsa	clamp		1 /2	1 /2
33	75.2012.02		parete	wall		1 /2	1 /2
34	712 344 362.03	1801 3703	fusibile	fuse	5x20	1 /2	1 /2
35	75.2010.31		morsa	clamp	RK6-10PA	1	1

globalgastroparts.com - szervizaruhaz.hu

			unità cassetto MS	unit MS drawer		Compact 72.3780.14a Large 72.3090.14a 2 1.8.97	
Pos.	Produkt Nr.	Service Nr.	designatione	designation		148/159	248/259
36	75.2010.34		congiungimento	connection	RK6-10PA	2	3
37	75.2011.02		morsa	clamp	SL10/35	2	2
40	72.1721.01		cavo	cable	440V	1	1
	72.1721.03		cavo	cable	400-415V	1	1
	72.1721.02		cavo	cable	200-230V	1	1
41	72.4101.01		cavo	cable		1	1
	72.4101.02		cavo	cable		1	1
	72.4101.03		cavo	cable			1
	72.4101.04		cavo	cable			1
43	72.4955	1802 5583	interruttore	switch		2	4
44	75.0008.02	1802 5415	sensore	sensor		2	4
45	75.9013.04	1802 5413	protezione	protection		2	4
47	1115 1391	1101 9008	brida di cavo	cable clamp	4,8x200	36	12
48	1115 1235		brida di cavo	cable clamp		3	3
50	72.2899		guida	guide		1	
	72.2898		guida	guide			1

globalgastroparts.com - szervizeruhaz.hu

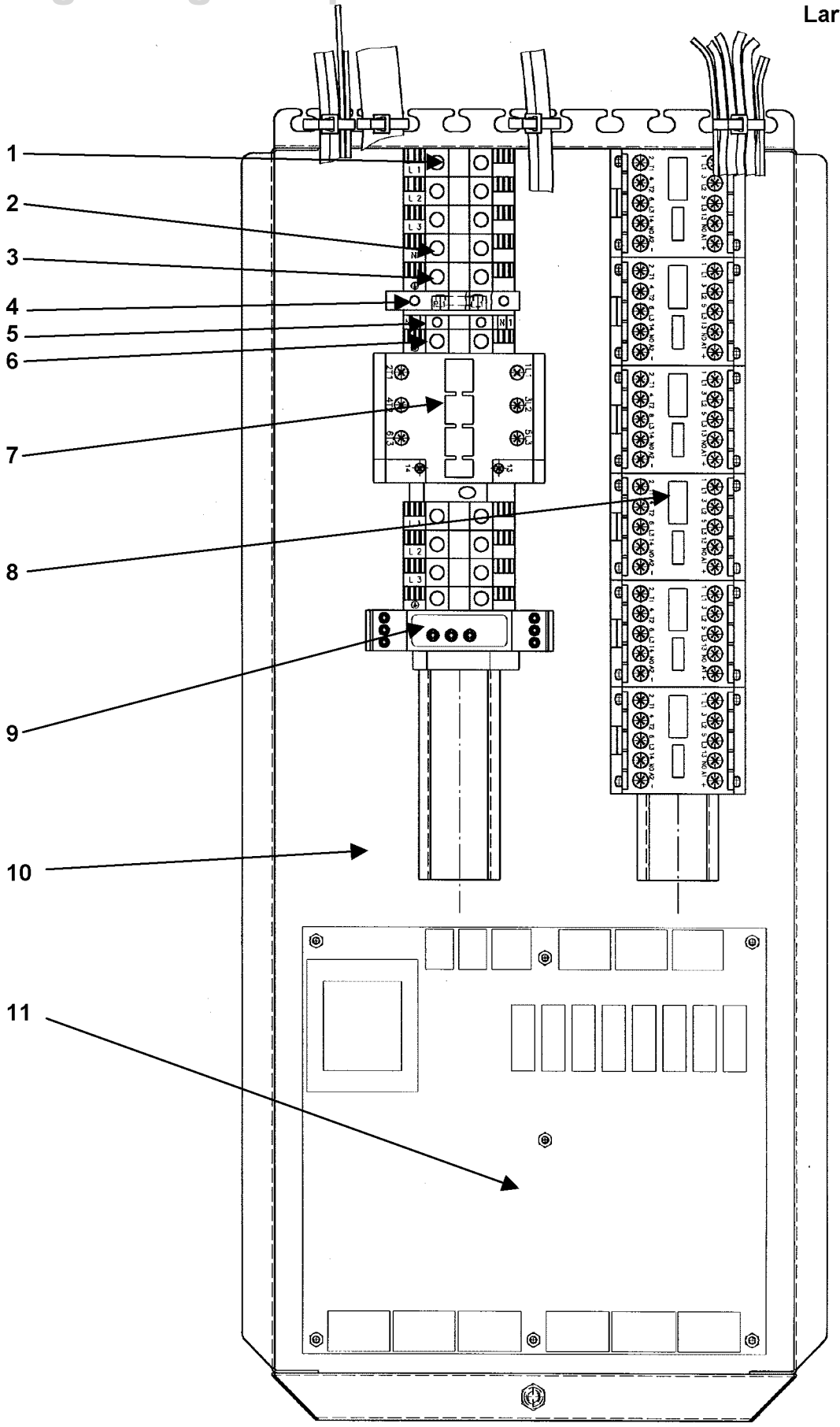

globalgastroparts.com - szervizaruhaz.hu

			unità cassetto MS ALCE	unit MS drawer ALCE		Compact 72.3780.14b Large 72.3090.14b 1 02.07.01	
Pos.	Product Nr.	Service Nr.	designatione	designation	148/159	248/259	Introd.
1	75.2010.40		morsa	phase terminal	6	6	
2	75.2010.41		morsa condut. neutrale	neutral wire term.	1	1	
3	75.2011.03		morsa di protezione	protection terminal	1	1	
4	75.2012.01		morsa per fusibile	fuse terminal	1	1	
5	75.2010.21		morsa condut. neutrale	neutral wire term.	1	1	
6	75.2011.02		morsa di protezione	protection terminal	2	2	
7	1115 1355		contattore	contactor	1	1	
8	72.5208.01		mini-contattore	mini-contactor	6	6	
9	72.6715.02		relé di tempo	time relay	1	1	
10	72.6209		cassetto	rack	1	1	
11	72.6431		print	circuit board	1	1	

globalgastroparts.com - szervizaruhaz.hu

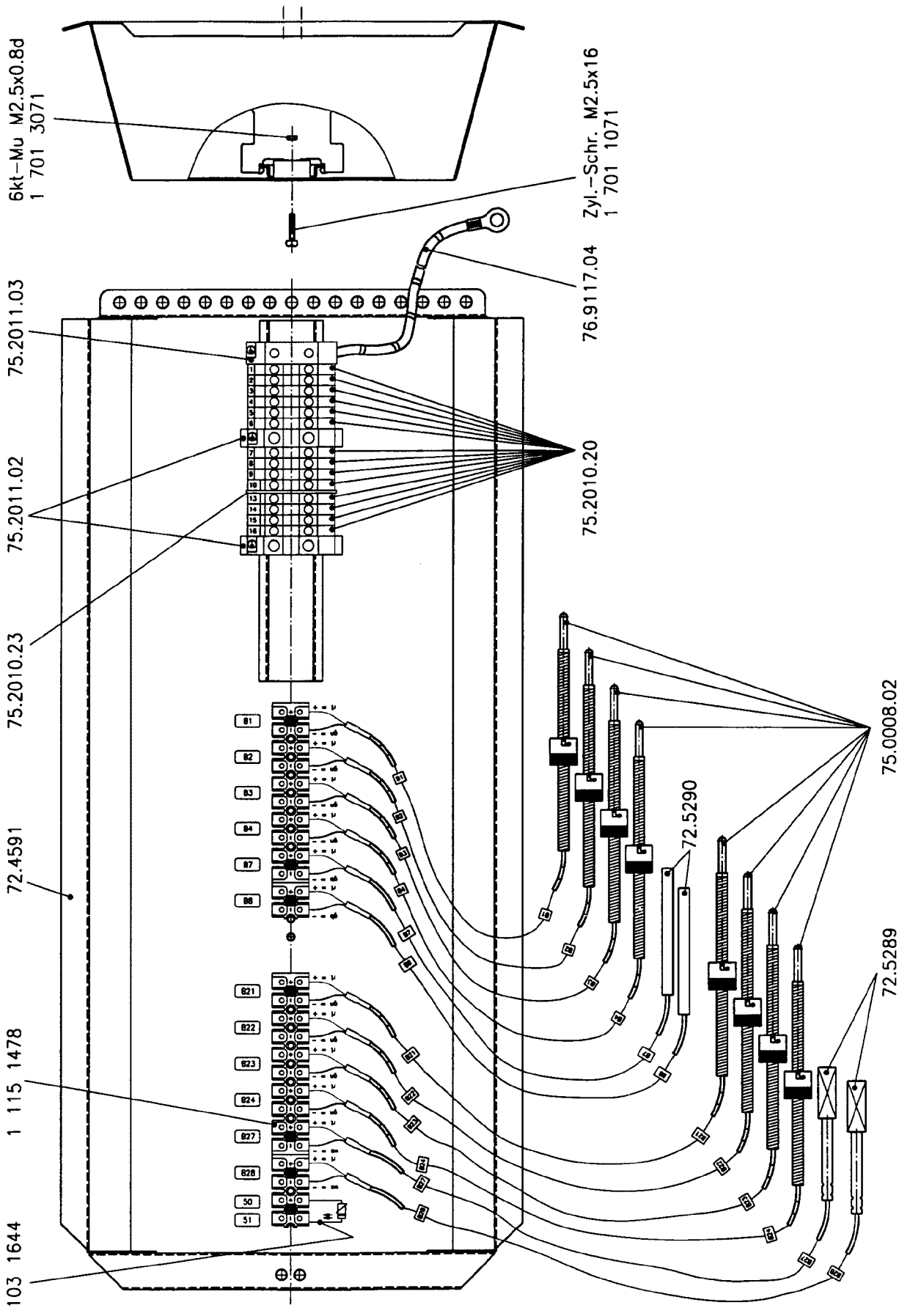

globalgastroparts.com - szervizaruha

MARINE ALEX / EMS	unità cassetto	unit drawer	Large 72.3090.16 1 06.98

Type	Produkt Nr.	designatione	designation	159	259
BP/ALEMS	72.4934.01	cassetto completo	drawer complete		1
	75.0008.02	sensore di temperatura	temperature sensor		8
	1115 1478	morsa	terminal		8
	75.2010.20	morsa	terminal		12
	75.2011.02	supporto finale	end support		2
	75.2011.03	morsa di terra	earth clamp		1
BP/ALEX	72.4934.02	cassetto completo	drawer complete		1
	75.0008.02	sensore di temperatura	temperature sensor		4
	1115 1478	morsa	terminal		4
	75.2010.20	morsa	terminal		12
	75.2011.02	supporto finale	end support		2
	75.2011.03	morsa di terra	earth clamp		1
BP/EMS	72.4934.03	cassetto completo	drawer complete		1
	75.0008.02	sensore di temperatura	temperature sensor		4
	1115 1478	morsa	terminal		4
BP/BO/ALEMS	72.4934.04	cassetto completo	drawer complete		1
	75.0008.02	sensore di temperatura	temperature sensor		8
	72.5289	sensore di temperatura	temperature sensor		2
	72.5290	sensore di temperatura	temperature sensor		2
	1115 1478	morsa	terminal		12
	75.2010.20	morsa	terminal		16
	75.2011.02	supporto finale	end support		2
	75.2011.03	morsa di terra	earth clamp		1
	75.2010.23	separazione	partition wall		1

globalgastroparts.com - szervizaruhaz.hu

MARINE ALEX/EMS	unità cassetto	unit drawer		Large 72.3090.16 2 06.98

Type	Produkt Nr.	designatione	designation	159	259
BP/ALEX	72.4934.05	cassetto completo	drawer complete	1	
	75.0008.02	sensore di temperatura	temperature sensor	2	
	1115 1478	morsa	terminal	2	
	75.2010.20	morsa	terminal	6	
	75.2011.02	supporto finale	end support	1	
	75.2011.03	morsa di terra	earth clamp	1	
BP/EMS	72.4934.06	cassetto completo	drawer complete	1	
	75.0008.02	sensore di temperatura	temperature sensor	2	
	1115 1478	morsa	terminal	2	
BP/ALEMS	72.4934.07	cassetto completo	drawer complete	1	
	75.0008.02	sensore di temperatura	temperature sensor	4	
	1115 1478	morsa	terminal	4	
	75.2010.20	morsa	terminal	6	
	75.2011.02	supporto finale	end support	1	
	75.2011.03	morsa di terra	earth clamp	1	
BP/BO/ALEX	72.4934.08	cassetto completo	drawer complete		1
	75.0008.02	sensore di temperatura	temperature sensor		4
	72.5290	sensore di temperatura	temperature sensor		2
	1115 1478	morsa	terminal		6
	75.2010.20	morsa	terminal		16
	75.2011.02	supporto finale	end support		2
	75.2011.03	morsa di terra	earth clamp		1
	75.2010.23	separazione	partition wall		1

globalgastroparts.com - szervizaruhaz.hu

MARINE ALEX/EMS	unità cassetto	unit drawer	Large 72.3090.16 3 06.98

Type	Produkt Nr.	designatione	designation	159	259
MS/BO/ALEMS	72.4935.01	cassetto completo	drawer complete		1
	75.0008.02	sensore di temperatura	temperature sensor		8
	72.5289	sensore di temperatura	temperature sensor		2
	72.5290	sensore di temperatura	temperature sensor		2
	1115 1478	morsa	terminal		13
	1103 1644	sensore di temperatura	temperature sensor		1
	75.2010.20	morsa	terminal		12
	75.2011.02	supporto finale	end support		2
	75.2011.03	morsa di terra	earth clamp		1
	75.2010.23	separazione	partition wall		1
MS/BO/ALEX	72.4935.02	cassetto completo	drawer complete		1
	75.0008.02	sensore di temperatura	temperature sensor		4
	72.5290	sensore di temperatura	temperature sensor		2
	1115 1478	morsa	terminal		7
	1103 1644	sensore di temperatura	temperature sensor		1
	75.2010.20	morsa	terminal		12
	75.2011.02	supporto finale	end support		2
	75.2011.03	morsa di terra	earth clamp		1
	75.2010.23	separazione	partition wall		1
MS/ALEMS	72.4935.03	cassetto completo	drawer complete	1	
	75.0008.02	sensore di temperatura	temperature sensor	4	
	1115 1478	morsa	terminal	5	
	1103 1644	sensore di temperatura	temperature sensor	1	
	75.2010.20	morsa	terminal	4	
	75.2011.02	supporto finale	end support	1	
	75.2011.03	morsa di terra	earth clamp	1	

globalgastroparts.com - szervizaruhaz.hu

MARINE ALEX/EMS	unità cassetto	unit drawer	Large 72.3090.16 4 06.98

Type	Produkt Nr.	designatione	designation	159	259
MS/ALEX	72.4935.04	cassetto completo	drawer complete	1	
	75.0008.02	sensore di temperatura	temperature sensor	2	
	1115 1478	morsa	terminal	3	
	1103 1644	sensore di temperatura	temperature sensor	1	
	75.2010.20	morsa	terminal	4	
	75.2011.02	supporto finale	end support	1	
	75.2011.03	morsa di terra	earth clamp	1	
MS/ALEX	72.4935.05	cassetto completo	drawer complete		1
	75.0008.02	sensore di temperatura	temperature sensor		4
	1115 1478	morsa	terminal		5
	1103 1644	sensore di temperatura	temperature sensor		1
	75.2010.20	morsa	terminal		8
	75.2011.02	supporto finale	end support		1
	75.2011.03	morsa di terra	earth clamp		1
MS/ALEMS	72.4935.06	cassetto completo	drawer complete		1
	75.0008.02	sensore di temperatura	temperature sensor		8
	1115 1478	morsa	terminal		9
	1103 1644	sensore di temperatura	temperature sensor		1
	75.2010.20	morsa	terminal		8
	75.2011.02	supporto finale	end support		1
	75.2011.03	morsa di terra	earth clamp		1
MS/BO/ALEMS	72.4935.07	cassetto completo	drawer complete	1	
	75.0008.02	sensore di temperatura	temperature sensor	4	
	72.5289	sensore di temperatura	temperature sensor	2	
	72.5290	sensore di temperatura	temperature sensor	2	
	1115 1478	morsa	terminal	9	
	1103 1644	sensore di temperatura	temperature sensor	1	
	75.2010.20	morsa	terminal	8	
	75.2011.02	supporto finale	end support	2	
	75.2011.03	morsa di terra	earth clamp	1	

globalgastroparts.com - szervizaruhaz.hu

MARINE ALEX/EMS	unità cassetto	unit drawer	Large 72.3090.16 5 06.98

Type	Produkt Nr.	designatione	designation	159	259
MS/BO/ALEX	72.4935.08	cassetto completo	drawer complete	1	
	75.0008.02	sensore di temperatura	temperature sensor	2	
	72.5290	sensore di temperatura	temperature sensor	2	
	1115 1478	morsa	terminal	5	
	1103 1644	sensore di temperatura	temperature sensor	1	
	75.2010.20	morsa	terminal	8	
	75.2011.02	supporto finale	end support	2	
	75.2011.03	morsa di terra	earth clamp	1	
MS/BP/BO/ALEMS	72.5245.01	cassetto completo	drawer complete		1
	75.0008.02	sensore di temperatura	temperature sensor		8
	72.5289	sensore di temperatura	temperature sensor		2
	72.5290	sensore di temperatura	temperature sensor		2
	1115 1478	morsa	terminal		13
	1103 1644	sensore di temperatura	temperature sensor		1
	75.2010.20	morsa	terminal		14
	75.2011.02	supporto finale	end support		2
	75.2011.03	morsa di terra	earth clamp		1
	75.2010.23	separazione	partition wall		1

BP	placca per arrostire	fry-top
MS	piastra tutta superficie	large cooking plate
BO	forno	baking oven
ALEX	comando esterno	external control
EMS		
ALEMS (ALEX+EMS)	comando esterno	external control

globalgastroparts.com - szervizaruhaz.hu

Comact 72.3780.20
Large 72.3090.20
29.02.96

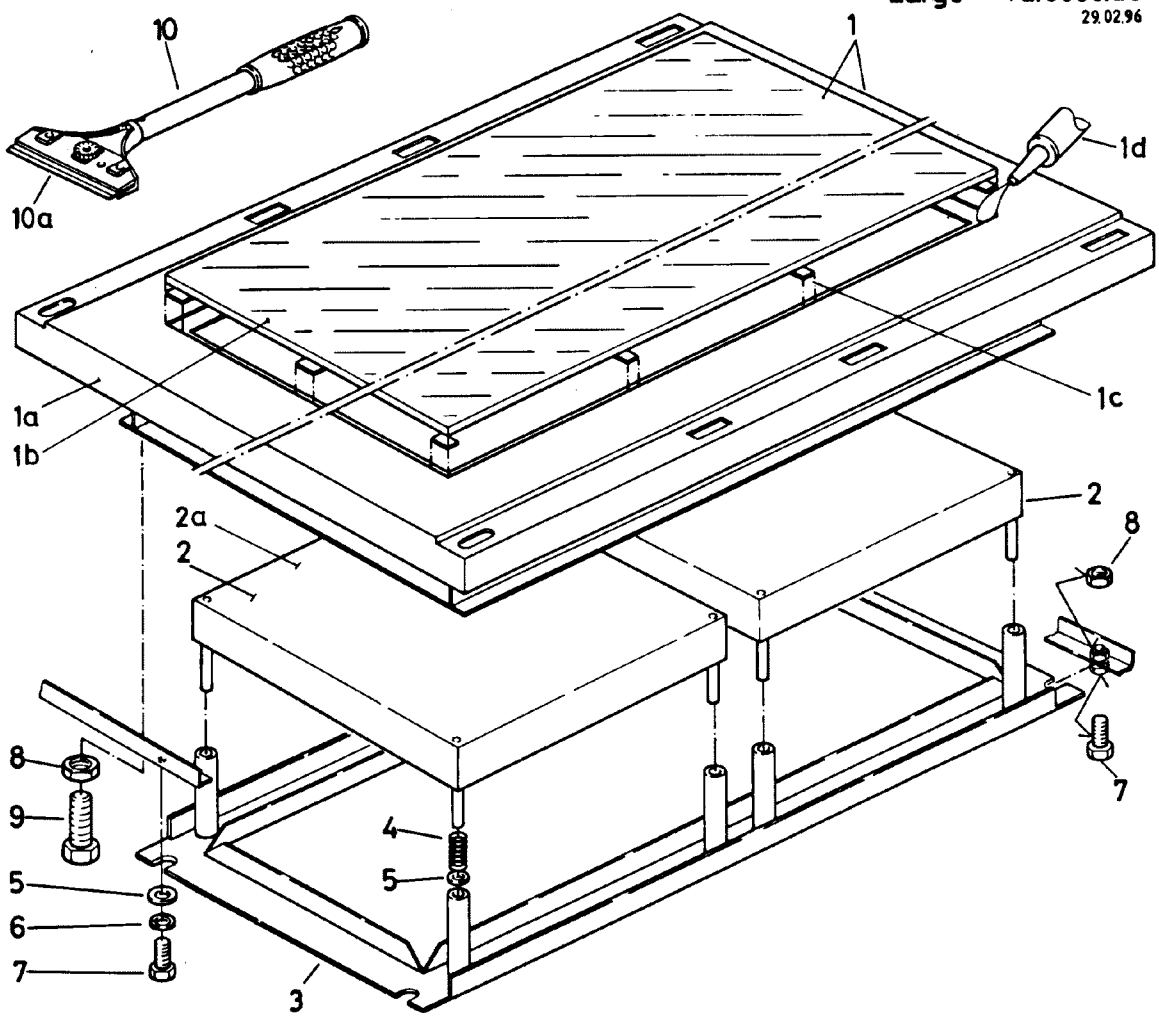

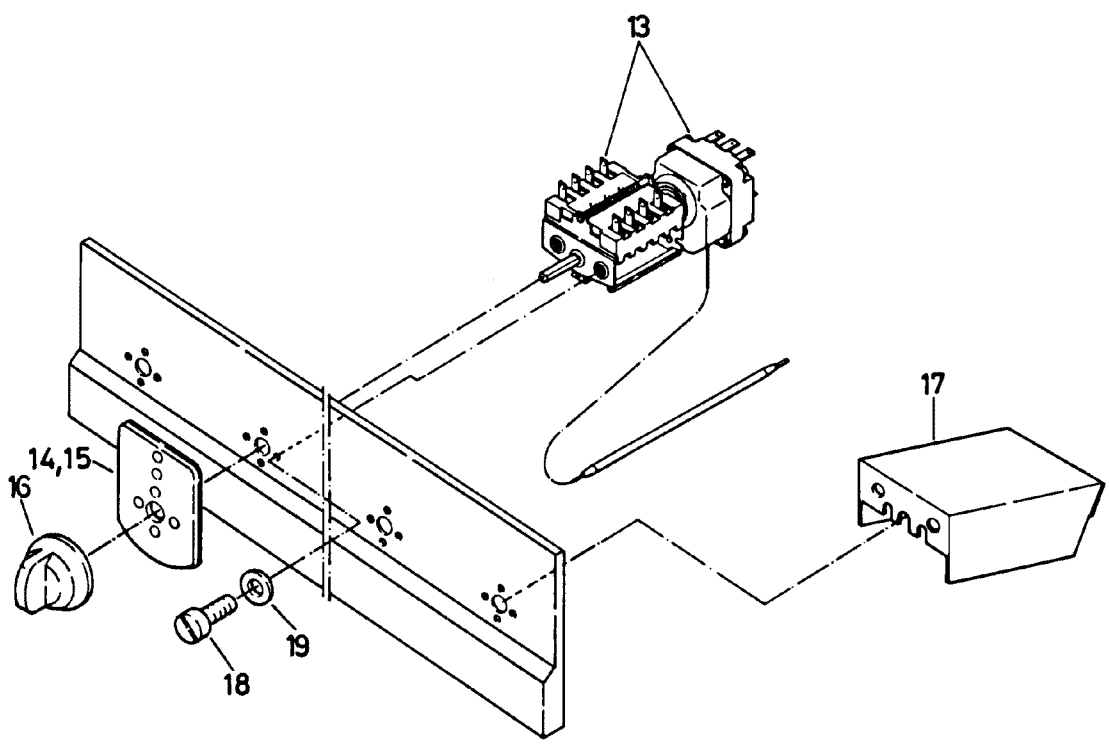

globalgastroparts.com - szervizaruhaz.hu

			unità piano vetroceramica	unit ceramic hob		Compact 72.3780.20 Large 72.3090.20 1/2 15.3.96			
Pos.	Produkt Nr.	Service Nr.	designatione	designation		158	159	248	259
1	72.2681		copertura compl.	cover compl.		1			
	72.2683		copertura compl.	cover compl.			1		
	72.2682		copertura compl.	cover compl.				1	
	72.2684		copertura compl.	cover compl.					1
1a	72.2621		copertura	cover		1			
	72.2623		copertura	cover			1		
	72.2622		copertura	cover				1	
	72.2624		copertura	cover					1
1b	72.1106	1800 1480	piano vetroceramica	ceramic hob		1			
	72.3120	1800 1481	piano vetroceramica	ceramic hob			1		
	72.1906	1800 1482	piano vetroceramica	ceramic hob				1	
	72.3121	1800 1483	piano vetroceramica	ceramic hob					1
1c	1201 1444	1802 5483	sostegno	base	Silicon				
1d		1201 1948	colla	adhesive	Silicon				
2	72.2895.01	1800 2881	riscaldamento	heating	4kW/400V	2	2	4	4
	72.2895.02		riscaldamento	heating	4kW/415V	2	2	4	4
	72.2895.03		riscaldamento	heating	4kW/440V	2	2	4	4
	72.2895.04		riscaldamento	heating	3,5kW/230V	2	2	4	4
	72.2895.05		riscaldamento	heating	3,5kW/240V	2	2	4	4
	72.2895.06		riscaldamento	heating	3,2kW/200V	2	2	4	4
2a	72.2896.01	1800 2880	riscaldamento/riconos.	heating/pan sensor	4kW/400V	2	2	4	4
3	72.2159.03		lamiera	sheet		1			
	72.2159.04		lamiera	sheet			1		
	72.2792.02		lamiera	sheet				2	
	72.2159.02		lamiera	sheet					2
4	75.9005	1802 5480	molla	spring		8	8	16	16
5	1701 3513	1802 5481	disco	disk	M8	12	12	20	20
6	1701 5008		anello di molla	spring ring	M8	4	4	8	8
7	1701 2582		vite	screw	M8x12	4	4	8	8
8	1701 3044		dado	nut	M8	4	4	8	8
9	1701 2569		vite	screw	M8	4	4	8	8
10	72.1275	1900 1413	raschietto	scraper		1	1	1	1
10a		1900 1414	lama	blade					

globalgastroparts.com - szervizaruhaz.hu

Pos.	Produkt Nr.	Service Nr.	designatione	designation		Introd.	158	159	248	259
13	75.0005	1802 5426	regolatore	regulator			2	2	4	4
14	72.2213	1900 6954	piastra davanti	plate front			1	1	2	2
	72.6390		piastra davanti	plate front	Electrolux	09.00	1	1	2	2
15	72.2214	1900 6955	piastra dietro	plate back			1	1	2	2
	72.6391		piastra dietro	plate back	Electrolux	09.00	1	1	2	2
16	72.2262.01	1901 6163	manetta	knob			2	2	4	4
17	72.2438		lamiera	sheet			2	2	4	4
18	1 701 2019		vite	screw	M4x8		4	4	8	8
19	1 701 5002		anello di molla	spring ring	M4		4	4	8	8

globalgastroparts.com - szervizaruhaz.hu

Compact 72.3780.21
Large 72.3090.21
2902.96

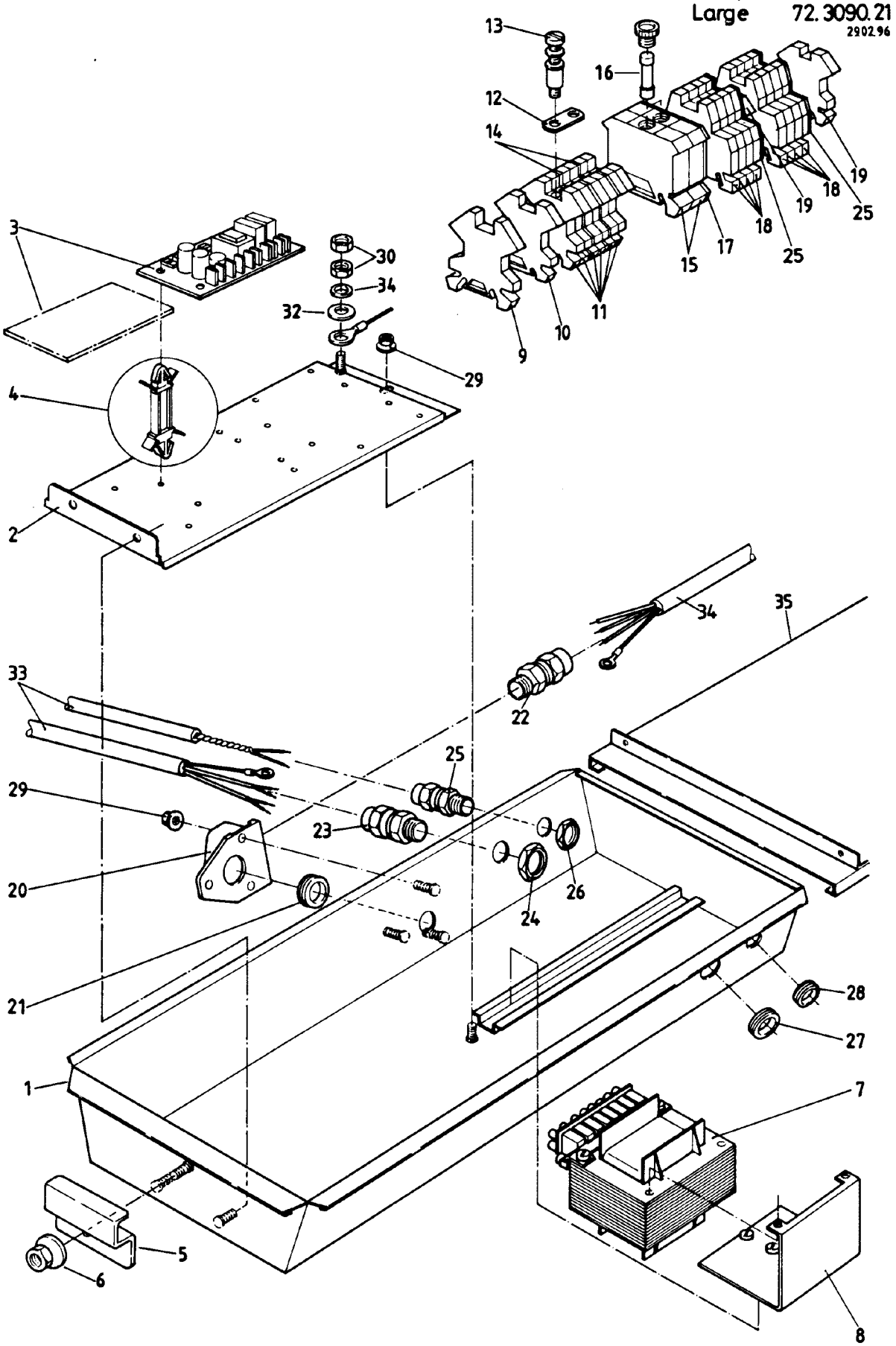

globalgastroparts.com - szervizaruhaz.hu

			unità riconoscimento pentola	unit pan sensor		Compact 72.3780.21 Large 72.3090.21 1/2 15.3.96	
Pos.	Produkt Nr.	Service Nr.	designatione	designation		148/159	248/259
1	72.1924		cassetto	drawer		1	1
2	72.1757		lamiera	sheet		1	1
3	72.1846	1 802 5445	print	print		1	2
4	75.5000.04		sostegno	support		4	8
5	72.0967		archetto	clamp		1	1
6	712 044120.06	1 101 8577	dado	nut		1	1
7	70.1371	1 802 5441	trasformatore	transformer	400-440V	1	1
8	72.1758		sostegno	support		1	1
9	75.2011.03	1 800 0864	morsa	clamp		1	1
10	75.2010.31	1 800 0875	morsa	clamp		1	1
11	75.2010.30	1 800 0872	morsa	clamp		6	6
12	75.2010.34		coprigiunto	latch		3	3
13	71.7066.90		bolzone	bolt		3	3
14	75.2010.22		parete	wall		2	2
15	75.2012.01	1 800 0857	morsa	clamp		2	2
16	712 344362.03	1 801 3703	fusibile	fuse	EM-E602	2	2
17	75.2012.02	1 800 0876	parete	wall		1	1
18	75.2010.10		morsa	clamp		8	8
19	75.2011.02	1 800 0837	morsa	clamp		2	2
20	75.2007		flangia	flange		1	1
21	712 044961.15		beccuccio	socket		1	1
22	1 103 1631		collegamento	fitting	PG21	1	1
23	1 115 1392		collegamento	fitting	PG21	2	2
24	1 115 1298		dado	nut	PG21	2	2
25	75.2010.12		parete	wall		2	2
26	1 115 1297		dado	nut		1	1
27	1 103 1605		beccuccio	socket	DG21	2	2
28	72.0593.04		beccuccio	socket	DG16	1	1
29	712 044120.05	1 101 8576	dado	nut	M5	4	4

globalgastroparts.com - szervizaruhaz.hu

			unità riconoscimento pentola	unit pan sensor			Compact 72.3780.21 Large 72.3090.21 2/2 15.3.96
Pos.	Produkt Nr.	Service Nr.	designatione	designation		148/159	248/259
30	1 701 3016		dado	nut	M6	2	2
31	1 701 5007		anello di molla	spring ring	M6	1	1
32	1 701 4003		rondella	disk	M6	1	1
33	72.1963.01		conduttura	conduit			1
	72.1963.02		conduttura	conduit		1	
34	72.1721.03		conduttura	conduit		1	1
35	72.2899		guida	guide		1	
	72.2898		guida	guide			1

globalgastroparts.com - szervizarubaz.hu

Compact 72.3780.21 a
Large 72.3090.21 a
1.08.97

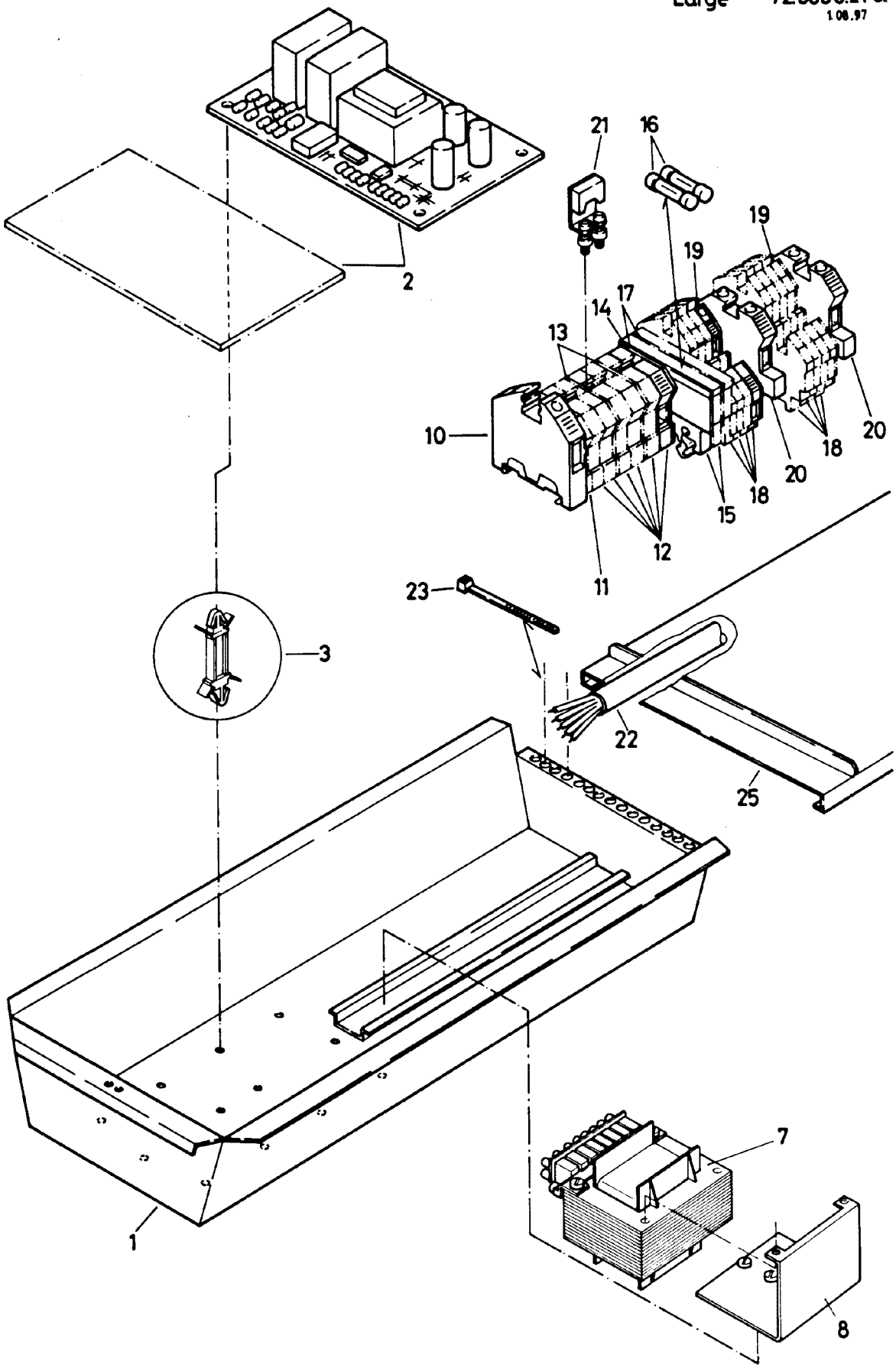

globalgastroparts.com - szervizaruhaz.hu

			unità	unit		Compact 72.3780.21a Large 72.3090.21a	
			riconoscimento pentola	pan sensor		1/1 1.8.97	
Pos.	Produkt Nr.	Service Nr.	designatione	designation		148/159	248/259
1	72.4591		cassetto	drawer		1	1
2	72.1846	1802 5445	print	print		1	2
3	75.5000.04		sostegno	support		4	8
7	70.1371	1802 5441	trasformatore	transformer		1	1
8	72.1758		lamiera	sheet		1	1
10	75.2011.03		morsa	clamp	SL 16/35	1	1
11	75.2010.31		morsa	clamp	PK6-10PA	1	1
12	75.2010.30		morsa	clamp	PK6-10PA	5	6
13	75.2010.23		parete	wall	TW2,5-10PA	2	2
14	75.2010.22		parete	wall	AP2,5-10PA	1	1
15	75.2012.01	1 802 5573	morsa	terminal		2	2
16	712 344 362.03	1801 3703	fusibile	fuse	5x20	2	2
17	75.2012.02		parete	wall	AP/STK1/PA	2	2
18	75.2010.10		morsa	clamp	PKD4PA	4	8
19	75.2010.12		parete	wall	AP4PA	1	2
20	75.2011.02		morsa	clamp	SL10/35	1	2
21	75.2010.34		congiungimento	connection	PK6-10PA	2	3
22	72.1721.03		cavo	cable	400-415V	1	1
23	1115 1391	1101 9008	brida di cavo	cable clamp	4,8x200	3	3
25	72.2899		guida	guide		1	
	72.2898		guida	guide			1

globalgastroparts.com - szervizaruhaz.hu

Compact 72.3780.25
Large 72.3090.25
29.02.96

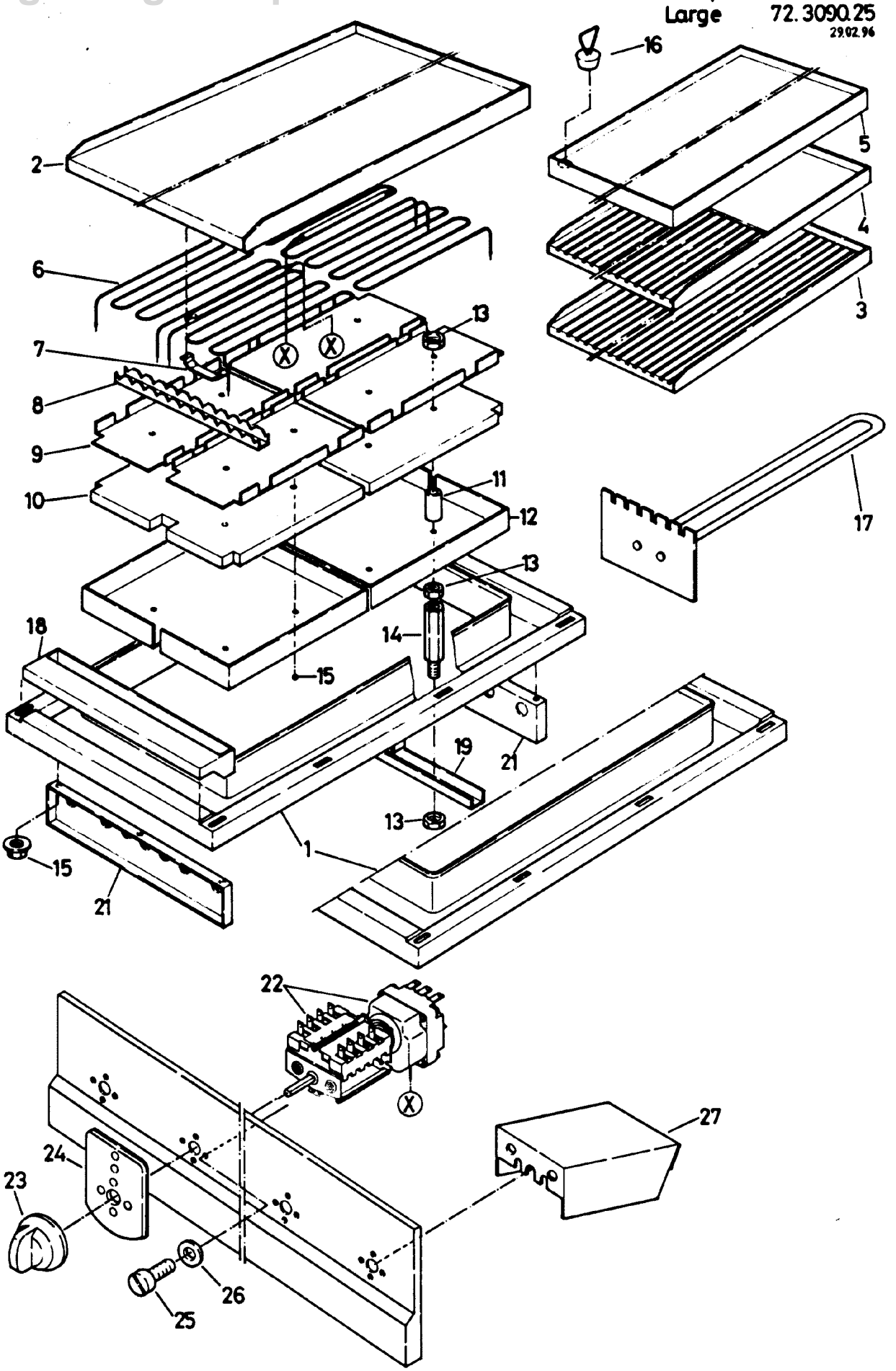

globalgastroparts.com - szervizaruhaz.hu

			Baugruppe Bratplatten	unité plaques à rôtir	unità placce per arrostire	unit fry-tops	Large 72.3090.25 1/2 15.3.96	
Pos.	Produkt Nr.	Service Nr.	Bezeichnung	désignation	designatione	designation	159	259
1	705 810707		Abdeckung	couvercle	copertura	cover	1	
	705 810708		Abdeckung	couvercle	copertura	cover	1	
	705 810706		Abdeckung	couvercle	copertura	cover	1	
	72.0680.01		Abdeckung	couvercle	copertura	cover		1
	72.0680.02		Abdeckung	couvercle	copertura	cover		1
			Platten roh	grillade brut	placca greggia	raw plate		
2	705 820 365.01		Griddleplatte	grillade lisse	placca liscia	griddle plate	1	
	72.0676.02		Griddleplatte	grillade lisse	placca liscia	griddle plate		1
3	705 820 363.01		Grillplatte	plaque grill	piastra griglia	grill plate	1	
	72.0676.01		Grillplatte	plaque grill	piastra griglia	grill plate		1
4	705 820 366.01		Grill/Griddleplatt.	plaque grill/lisse	piastra griglia/liscia	grill/griddle plate	1	
	72.0676.03		Grill/Griddleplatt.	plaque grill/lisse	piastra griglia/liscia	grill/griddle plate		1
5	705 820 364.01		Bratplatte	plaque rôtir	piastra arrostire	fry-top	1	
			Platte verchromt	grillade chromée	placca cromata	plate chromium-plated		
2cr	705 820 365.02		Griddleplatte	grillade lisse	placca liscia	griddle plate	1	
	72.0676.05		Griddleplatte	grillade lisse	placca liscia	griddle plate		1
3cr	705 820 363.02		Grillplatte	plaque grill	piastra griglia	grill plate	1	
	72.0676.04		Grillplatte	plaque grill	piastra griglia	grill plate		1
4cr	705 820 366.02		Grill/Griddleplatt.	plaque grill/lisse	piastra griglia/liscia	grill/griddle plate	1	
	72.0676.06		Grill/Griddleplatt.	plaque grill/lisse	piastra griglia/liscia	grill/griddle plate		1
5cr	705 820 364.02		Bratplatte	plaque rôtir	piastra arrostire	fry-top	1	

globalgastroparts.com - szervizaruhaz.hu

			Baugruppe Bratplatten	unité plaques à rôtir	unità placce per arrostire	unit fry-tops		Large 72.3090.25 2/2 15.3.96		
Pos.	Produkt Nr.	Service Nr.	Bezeichnung	désignation	designatione	designation		159	259	Intr.
6	705 030 323.03	1801 1703	Heizung	chauffage	riscaldamento	heating	2kW/400V	4	8	
	705 030 323.01		Heizung	chauffage	riscaldamento	heating	2kW/440V	4	8	
	705 030 323.02		Heizung	chauffage	riscaldamento	heating	2kW/415V	4	8	
	705 030 323.04		Heizung	chauffage	riscaldamento	heating	2kW/230V	4	8	
	705 030 323.05		Heizung	chauffage	riscaldamento	heating	2kW/200V	4	8	
7	72.1843		Halter	fixation	sostegno	support		2	4	
8	72.1790		Halter	fixation	sostegno	support		4	8	
9	72.0538		Blech	tôle	lamiera	sheet		2	4	
10	705 020 424		Isolation	isolation	isolazione	insulation		2	4	
11	72.0573		Hülse	douille	guscio	sleeve		8	16	
12	72.0541		Blech	tôle	lamiera	sheet		2	4	
13	1701 3016		Mutter	écrou	dado	nut	M6	10	20	
14	71.2096.05		Bolzen	boulon	bolzone	bolt	M6	2	4	
15	712 044120.05	1101 8576	Mutter	écrou	dado	nut	M5	12	24	
16	705 840 343		Stopfen	bouchon	tappo	plug		1	1	
17	72.0640	1900 1412	Schaber	grattoir	raschietto	scraper		1	1	
18	705 020 419	1900 9222	Schale	récipient	bacinella	bowl		1		
	72.0683	1900 9228	Schale	récipient	bacinella	bowl			1	
19	72.0679		Bügel	étrier	archetto	clamp		1	2	
21	705 030 174		Stütze	appui	sostegno	stud		1		
			Stütze	appui	sostegno	stud			1	
22	712 844 007	1801 5428	Regler	régulateur	regolatore	regulator		2	4	
23	72.2258.01	1901 6164	Griff	poignée	manetta	knob		2	4	
24	72.2213	1900 6954	Platte vorne	plaque devant	piastra davanti	plate front		1	2	
	72.6390		Platte vorne	plaque devant	piastra davanti	plate front	Electrolux	1	2	09.00
	72.2214	1900 6955	Platte hinten	plaque derrière	piastra dietro	plate back		1	2	
	72.6391		Platte hinten	plaque derrière	piastra dietro	plate back	Electrolux	1	2	09.00
25	1701 2019		Schraube	vis	vite	screw	M4x8	4	8	
26	1701 5002		Federring	anneau de ressort	anello di molla	spring ring	M4	4	8	
27	72.2438		Blech	tôle	lamiera	sheet		2	4	

globalgastroparts.com - szervizaruhaz.hu

Compact 72.3780.25 a
Large 72.3090.25 a
01. 08. 97

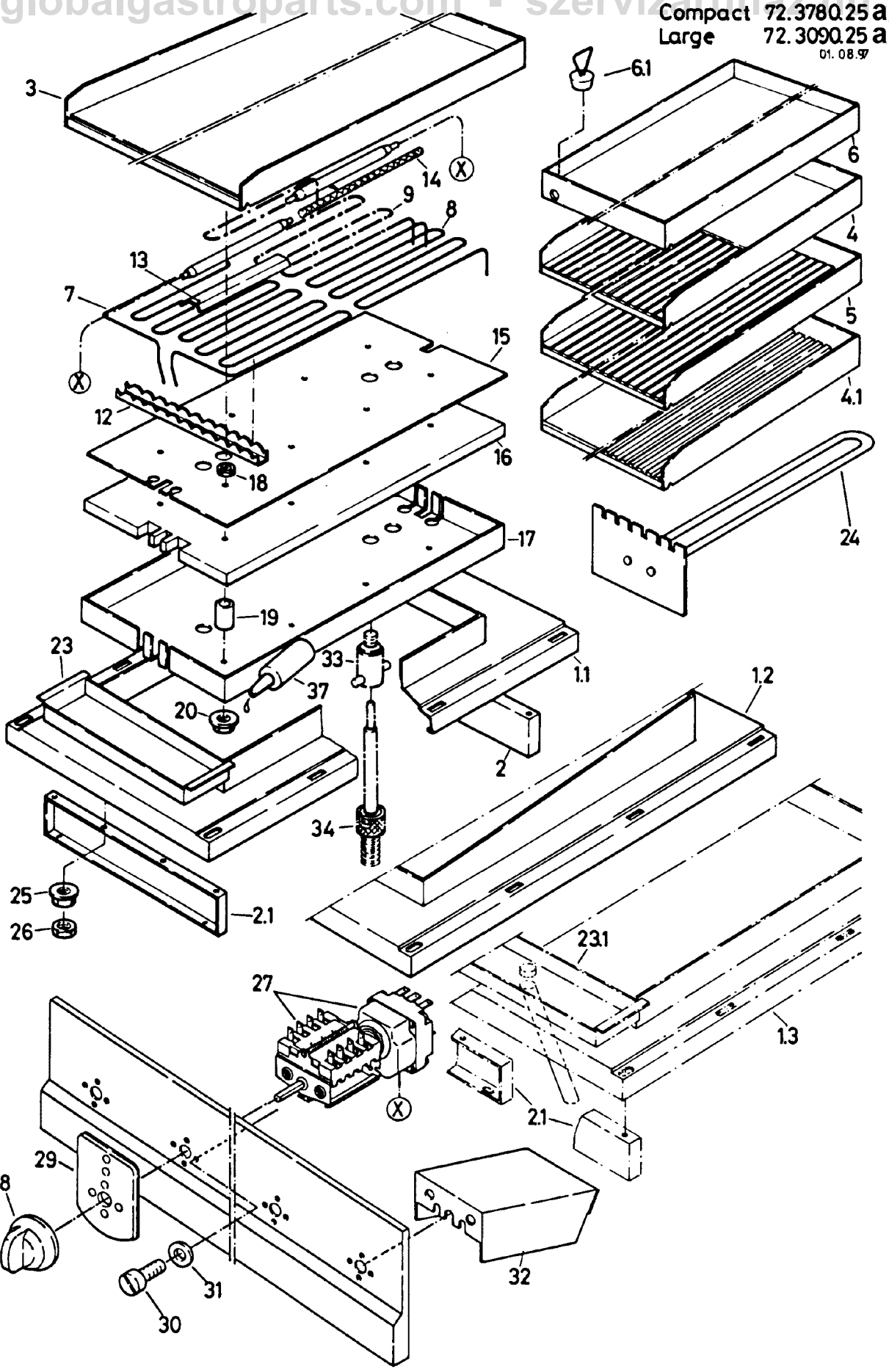

globalgastroparts.com - szervizaruhaz.hu

			unità placca per arrostire	unit fry-top		Compact 72.3780.25a Large 72.3090.25a 1/3 1.8.97			
Pos.	Produkt Nr.	Service Nr.	designatione	designation		158	159	259	259Marine
1.1	72.3988		copertura	cover		1			
	72.4665		copertura	cover			1		
	72.3791		copertura	cover			1		
1.2	72.4667.01		copertura	cover				1	
	72.4667.02		copertura	cover					1
1.3	72.4666.01		copertura	cover				1	
	72.4666.02		copertura	cover					1
2	72.3799		supporto	support		2	2		
	72.4760		supporto	support				2	2
2.1	72.4759		supporto	support				2	1
3	72.3986.01		placca liscia	griddle plate		1			
	72.3986.02		placca liscia	griddle plate		1			
	72.3862.01		placca liscia	griddle plate			1		
	72.3862.02		placca liscia	griddle plate			1		
	72.4656.01		placca liscia	griddle plate				1	1
	72.4656.02		placca liscia	griddle plate				1	
4	72.4335.01		griglia / placca liscia	grill / griddle plate		1			
	72.4335.02		griglia / placca liscia	grill / griddle plate		1			
	72.4153.01		griglia / placca liscia	grill / griddle plate			1		
	72.4153.02		griglia / placca liscia	grill / griddle plate			1		
4.1	72.4657.01		griglia / placca liscia	grill / griddle plate				1	1
	72.4657.02		griglia / placca liscia	grill / griddle plate				1	
5	72.4653.01		placca per griglia	grill plate			1		
	72.4653.02		placca per griglia	grill plate			1		
	72.4655.01		placca per griglia	grill plate				1	1
	72.4655.02		placca per griglia	grill plate				1	
6	72.4654.01		placca per arrostire	fry-top			1		
	72.4654.02		placca per arrostire	fry-top			1		
6.1	705 840343		tappo	plug			1		
7	72.1786.05		riscaldamento	heating	3,2kW/200V	2			
	72.1786.04		riscaldamento	heating	3,6kW/230V	2			
	72.1786.03	1 801 1718	riscaldamento	heating	4,3kW/400V	2			
	72.1786.02		riscaldamento	heating	4,3kW/415V	2			
	72.1786.01		riscaldamento	heating	4,3kW/440V	2			
8	705 030323.05		riscaldamento	heating	2kW/200V		4	8	6
	705 030323.04		riscaldamento	heating	2kW/230V		4	8	6

globalgastroparts.com - szervizaruhaz.hu

			Baugruppe Bratplatte 01 02	unité plaque à rôtir eingeölt verchromt	unità placca per arrostire	unit fry-top		Compact 72.3780.25a Large 72.3090.25a			2/3 1.8.97
Pos.	Produkt Nr.	Service Nr.	Bezeichnung	désignation	designatione	designation		158	159	259	259Marine
	705 030323.03	1801 1703	Heizung	chauffage	riscaldamento	heating	2kW/400V		4	8	6
	705 030323.02		Heizung	chauffage	riscaldamento	heating	2kW/415V		4	8	6
	705 030323.01	1 800 2889	Heizung	chauffage	riscaldamento	heating	2kW/440V		4	8	6
9	72.4722.05		Heizung	chauffage	riscaldamento	heating	2kW/200V				2
	72.4722.04		Heizung	chauffage	riscaldamento	heating	2kW/230V				2
	72.4722.03		Heizung	chauffage	riscaldamento	heating	2,5kW/400V				2
	72.4722.02		Heizung	chauffage	riscaldamento	heating	2,5kW/415V				2
	72.4722.01		Heizung	chauffage	riscaldamento	heating	2,5kW/440V				2
12	72.1790		Halter	fixation	sostegno	support		4	4		
	72.4723		Halter	fixation	sostegno	support				4	4
13	72.4809		Halter	fixation	sostegno	support		2			
	72.4208		Halter	fixation	sostegno	support			2	4	4
14	1 201 1834		Schnur	ficelle	filo	string	0.3m	1			
	1 201 1834		Schnur	ficelle	filo	string	0.32m		1		
	1 201 1834		Schnur	ficelle	filo	string	1.2m			1	1
15	72.4783		Blech	tôle	lamiera	sheet		1			
	72.4784		Blech	tôle	lamiera	sheet			1		
	72.4724		Blech	tôle	lamiera	sheet				1	1
16	72.4787		Isolation	isolation	isolazione	insulation		1			
	72.4788		Isolation	isolation	isolazione	insulation			1		
	72.4757		Isolation	isolation	isolazione	insulation				1	1
17	72.4785		Verschalung	revêtement	rivestimento	casing		1			
	72.4786		Verschalung	revêtement	rivestimento	casing			1		
	72.4725		Verschalung	revêtement	rivestimento	casing				1	1
18	1 701 3014	1 101 8761	Mutter	écrou	dado	nut	M6x0.5d	8	8	16	16
19	72.0573		Hülse	douille	guscio	sleeve	□10/8x20	8	8	16	16
20	712 044120.06	1101 8577	Mutter	écrou	dado	nut	M6	4	4	4	4
21	1 201 1586		Paste	pâte	pasta	paste		10	10	10	10
23	72.4782		Schale	récipient	bacinella	bowl		1	1		
	72.4771		Schale	récipient	bacinella	bowl				1	
23.1	72.4721		Schale	récipient	bacinella	bowl					1
24	72.0640	1 900 1912	Schaber	grattoir	raschietto	scraper		1	1	1	1
25	712 044120.05	1101 8576	Mutter	écrou	dado	nut	M5	8	8	9/10	9/10

globalgastroparts.com - szervizaruhaz.hu

Pos.	Produkt Nr.	Service Nr.	designatione	designation	Introd.	158	159	259	259Marine
26	1701 3008	1101 8571	dado	nut	M5	8	8	9/10	9/10
27	712 844 007	1801 5428	regolatore	regulator		2	2	4	4
28	72.2258.01	1901 6164	manetta	knob		2	2	4	4
29	72.2213	1900 6954	piastra davanti	plate front		1	1	2	2
	72.6390		piastra davanti	plate front	Electrolux 09.00	1	1	2	2
	72.2214	1900 6955	piastra dietro	plate rear		1	1	2	2
	72.6391		piastra dietro	plate rear	Electrolux 09.00	1	1	2	2
30	1701 2019		vite	screw	M4x8	4	4	8	8
31	1701 5002		anello di molla	spring ring	M4	4	4	8	8
32	72.2438		lamiera	sheet		2	2	4	4
33	75.9013.04		protezione	protection					8
34	75.0008.02	1802 5415	sensore	sensor					8
37	72.3865		pasta	paste		1	1	1	1

globalgastroparts.com - szervizaruhaz.hu

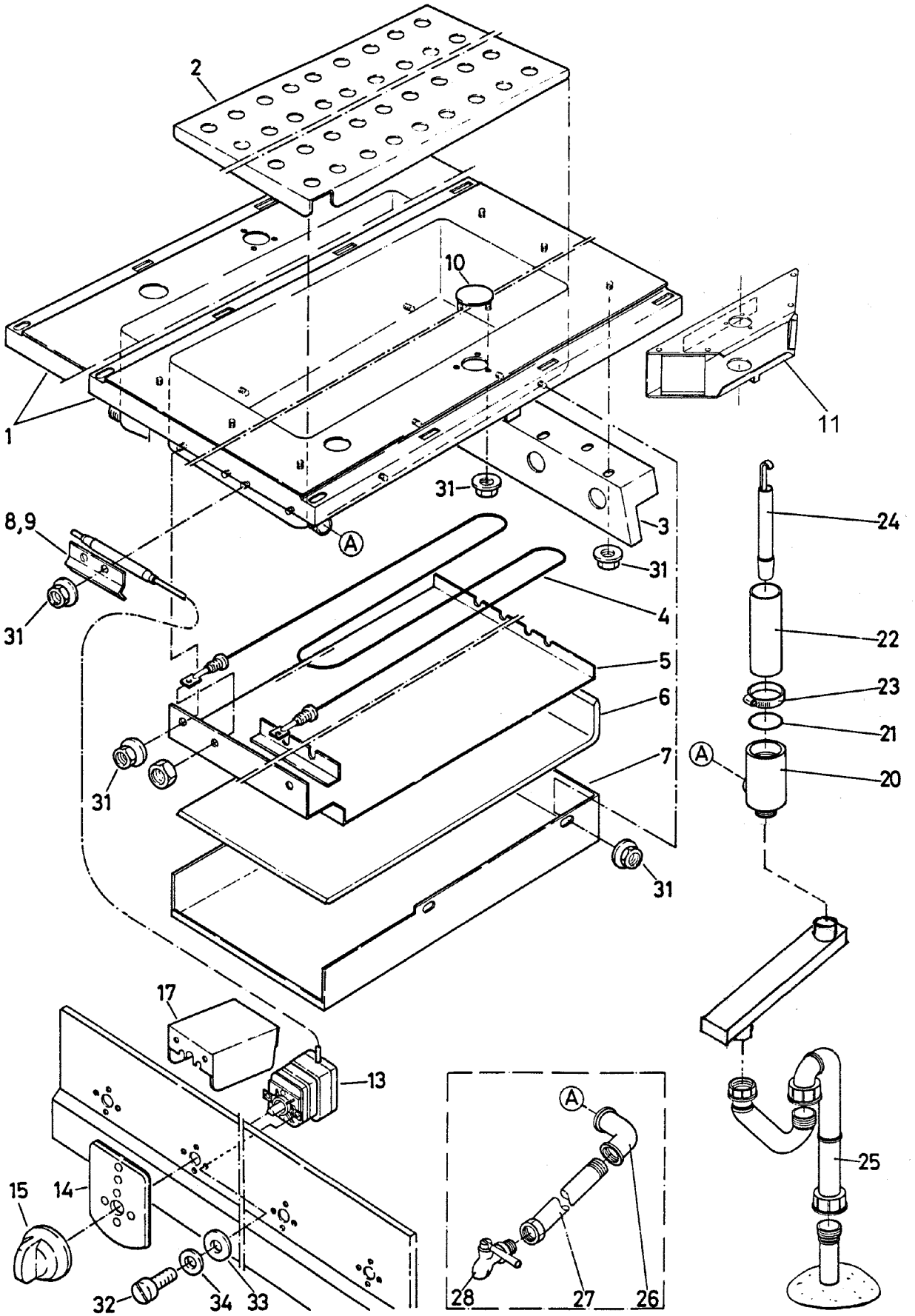

globalgastroparts.com - szervizaruhaz.hu

			Baugruppe Bain-Marie	unité bain-marie	unità bagnomaria	unit bain marie		Compact 72.3780.30 Large 72.3090. 30 1 15.3.96		
Pos.	Produkt Nr.	Service Nr.	Bezeichnung	désignation	designatione	designation		158	159	249
1	72.1116.01		Abdeckung	couvercle	copertura	cover		1		
	72.1116.02		Abdeckung	couvercle	copertura	cover		1		
	72.0274		Abdeckung	couvercle	copertura	cover			1	
	72.0273		Abdeckung	couvercle	copertura	cover			1	
	72.0276		Abdeckung	couvercle	copertura	cover				1
	72.0275		Abdeckung	couvercle	copertura	cover				1
2	72.1511		Blech	tôle	lamiera	sheet		1		
	72.0286		Blech rechts	tôle droit	lamiera destra	sheet right			1	
	72.0285		Blech links	tôle gauche	lamiera sinistra	sheet left			1	
	72.0288		Blech rechts	tôle droit	lamiera destra	sheet right				1
	72.0287		Blech links	tôle gauche	lamiera sinistra	sheet left				1
3	72.0300		Abstützung	support	supporto	support		2	2	
	72.0301		Abstützung	support	supporto	support				2
4	72.1094.02	1 801 1701	Heizung	chauffage	riscaldamento	heating	1.7kW/400V	1		
	72.1094.01		Heizung	chauffage	riscaldamento	heating	1.7kW/440V	1		
	72.1094.05		Heizung	chauffage	riscaldamento	heating	1.7kW/415V	1		
	72.1094.03		Heizung	chauffage	riscaldamento	heating	1.7kW/230V	1		
	72.1094.04		Heizung	chauffage	riscaldamento	heating	1.7kW/200V	1		
	705 030175.03	1 801 1702	Heizung	chauffage	riscaldamento	heating	2.4kW/400V		1	
	705 030175.01		Heizung	chauffage	riscaldamento	heating	2.4kW/440V		1	
	705 030175.02		Heizung	chauffage	riscaldamento	heating	2.4kW/415V		1	
	705 030175.04		Heizung	chauffage	riscaldamento	heating	2.4kW/230V		1	
	705 030175.05		Heizung	chauffage	riscaldamento	heating	2.4kW/200V		1	
	705 030426.03	1 801 1700	Heizung	chauffage	riscaldamento	heating	1.6kW/400V			1
	705 030426.01		Heizung	chauffage	riscaldamento	heating	1.6kW/440V			1
	705 030426.02		Heizung	chauffage	riscaldamento	heating	1.6kW/415V			1
	705 030426.04		Heizung	chauffage	riscaldamento	heating	1.6kW/230V			1
	705 030426.05		Heizung	chauffage	riscaldamento	heating	1.6kW/200V			1
5	72.1370		Schale	récipient	bacinella	bowl		1		
	72.0296		Schale	récipient	bacinella	bowl			1	
	72.0297		Schale	récipient	bacinella	bowl				1

globalgastroparts.com - szervizaruhaz.h

			unità bagnomaria	unit bain marie		Compact 72.3780.30 Large 72.3090.30 2 15.3.96			
Pos.	Produkt Nr.	Service Nr.	designatione	designation		158	159	249	Introd.
6	705 040 139.01		isolazione	insulation			1		
	705 040 139.02		isolazione	insulation		1			
	705 040 373		isolazione	insulation				1	
7	72.1373		copertura, rivestimento	casing		1			
	72.0293		copertura, rivestimento	casing			1		
	72.0294		copertura, rivestimento	casing				1	
8	72.1096		sostegno	support		1			
	705 030 172		sostegno	support			1	1	
9	72.1278		isolazione	insulation		1			
10	72.0619		rosetta	rose				1	
11	72.5918		mensola	console		1	1	1	10/99
13	712 344 039	1801 5429	interruttore	interruptor		1	1	1	
14	72.2213	1900 6954	piastra davanti	plate front		1	1	1	
	72.6390		piastra davanti	plate front	Electrolux	1	1	1	09.00
15	72.2257.03	1901 6165	manetta	knob		1	1	1	
17	72.2438		lamiera	sheet			1		
20	705 040 134		corpo della valvola	valve casing		1	1	1	
21	72.0457		anello	o-ring		1	1	1	
22	705 040 135		tubo	tube		1	1	1	
23	72.0458.11		brida serrante	dipper		1	1	1	
24	72.0313	1901 3140	tubo	tube		1	1	1	
25	705 820113	1900 4604	scolo	drain		1	1	1	
26	1102 2040		angolo	angle	1”-3/4”	1	1	1	
27	72.1376		tubo	tube		1			
	72.0316		tubo	tube			1	1	
28	712 344 888	1901 3054	rubinetto	tap		1	1	1	
31	712 044 120.05	1101 8576	dado	nut	M5	12	18	18	
32	1701 2019		vite	screw	M4x8	2	2	2	
33	1701 3502		disco	disk	M4	2	2	2	
34	1701 5002		anello di molla	spring ring	M4	2	2	2	
35	705 820 116		tubo	tube	390mm	1	1	1	
	705 820 117		tubo	tube	520mm	1	1	1	
	705 820 308		tubo	tube	750mm	1	1	1	

globalgastroparts.com - szervizaruhaz.hu

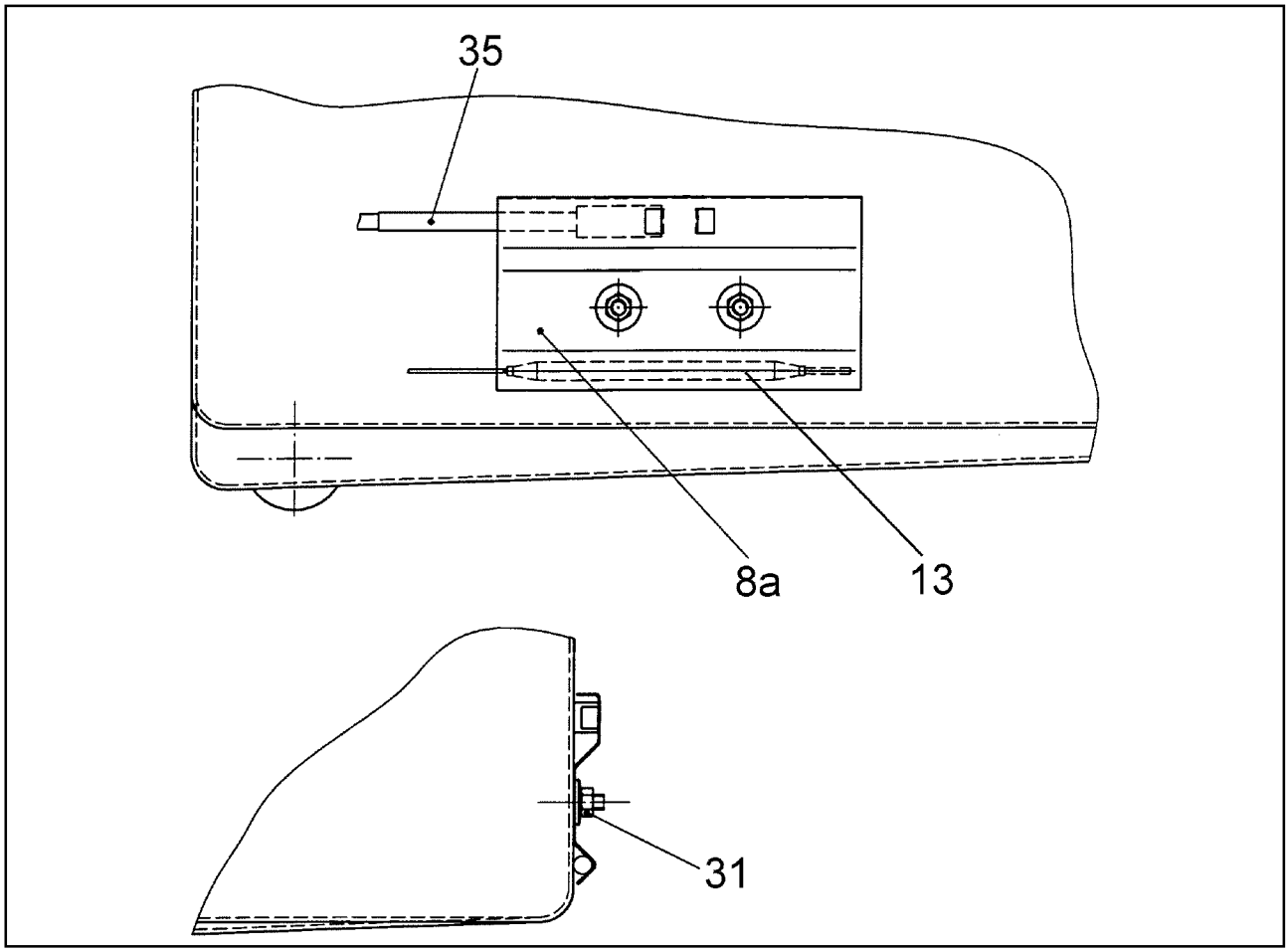

	MARINE ALEX / EMS		Baugruppe Bain-Marie	unité bain-marie	unità bagnomaria	unit bain marie	Large 72.3090. 30a 3 06.98	
Pos.	Produkt Nr.	Service Nr.	Bezeichnung	désignation	designatione	designation	159	249
8a	72.5486		Halter	fixation	sostegno	support	1	1
35	72.5289		Temperaturfühler	sonde de température	sensore di temperatura	temperature sensor	1	1

globalgastroparts.com - szervizaruhaz.hu

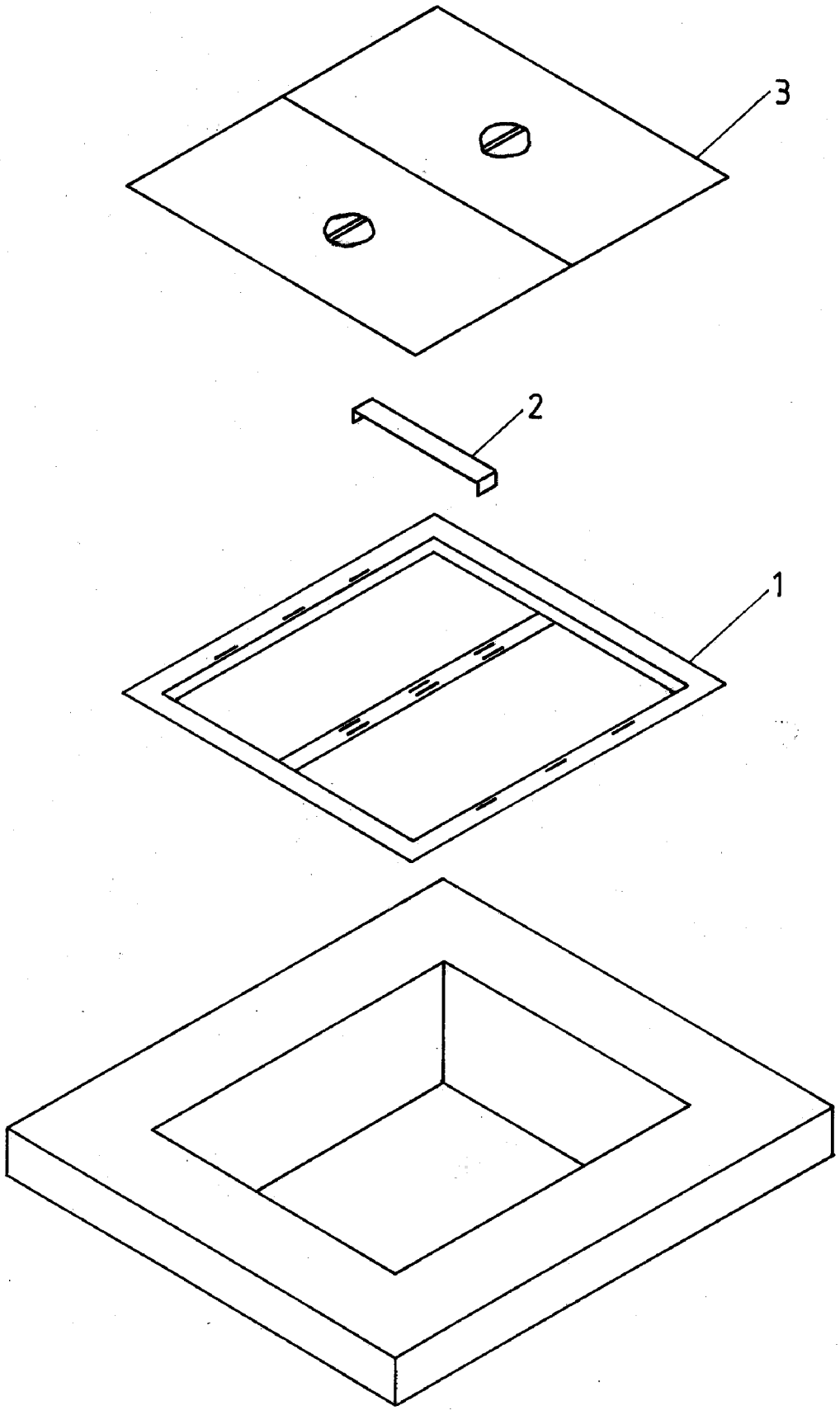

globalgastroparts.com - szervizaruhaz.hu

			Baugruppe Zubehör	unité accessoires	unità accessori	unit accessories		Compact 72.3780.30b Large 72.3090.30b 1 25.5.00			
Pos.	Produkt Nr.	Service Nr.	Bezeichnung	désignation	designatione	designation		158	159	249	Introd.
1	72.0487.01		Halter	fixation	sostegno	support			1		
	72.0487.02		Halter	fixation	sostegno	support				1	
2	72.0661		Querstück	traverse	traversa	traverse			2	4	
3	72.1595		Deckel	couvercle	coperchio	lid	GN1/1	1			
	72.0597.01		Deckel	couvercle	coperchio	lid	GN1/2		2		
	72.0597.02		Deckel	couvercle	coperchio	lid	GN1/1		1		
	72.0597.03		Deckel	couvercle	coperchio	lid				2	

globalgastroparts.com - szervizeruhaz.hu

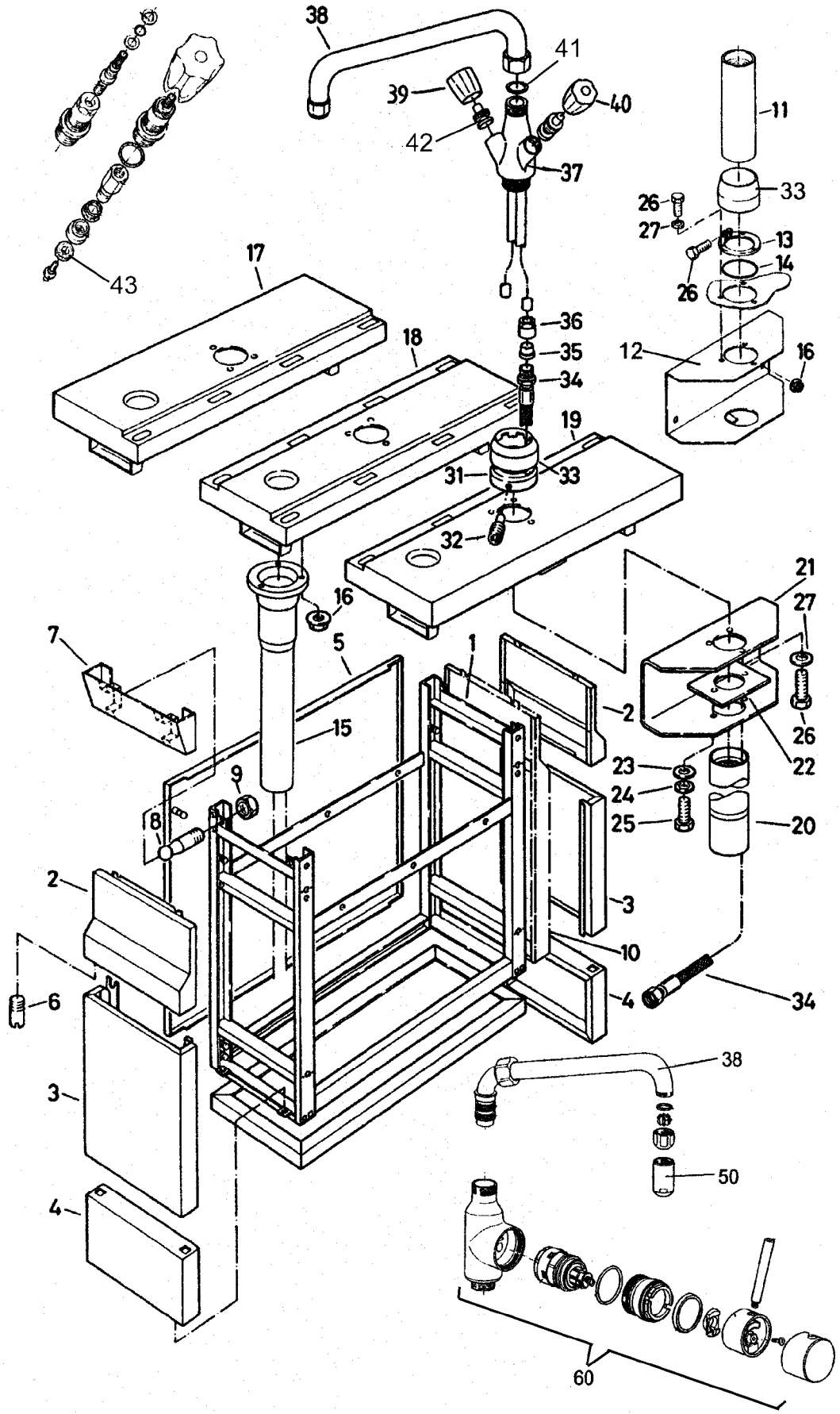

globalgastroparts.com - szervizaruhaz.hu

			unità batteria erogazione acqua	unit mixing unit		Large 72.3090.32 1/3 10.4.1995
Pos.	Produkt Nr.	Service Nr.	designatione	designation		129
1	72.3324		telaio fissaggio del suolo	frame bottom fixation	H=800mm	1
	72.5121.01		telaio fissaggio del suolo	frame bottom fixation	H=700mm	1
	72.5121.02	Marine	telaio fissaggio del suolo	frame bottom fixation	H=700mm	1
	72.3504		telaio p. ponte	frame f. bridge	H=400mm	1
	72.3505		telaio montaggio a muro	frame wall mounted	H=400mm	1
	72.5121.01		telaio montaggio a muro	frame wall mounted	H=700mm	1
	72.5121.02	Marine	telaio montaggio a muro	frame wall mounted	H=700mm	1
2	72.3145		copertura	filler		1
3	72.3154		parete posteriore mezzo	rear panel middle		1
4	72.3141		coperchio di raccordo fissaggio del suolo	connection cover bottom fixation	H=800mm	1
	72.3746		coperchio di raccordo ponte + muro	connection cover bridge + wall	H=400mm	1
5	72.2426		parete laterale fissaggio del suolo	side panel bottom fixation	H=800mm	2
	72.4557		parete laterale fissaggio del suolo	side panel bottom fixation	H=700mm	2
	72.2651		parete laterale ponte	side panel bridge	H=400mm	2
	72.2724		parete laterale montaggio a muro sinistra	side panel wall mounted left	H=400mm	1
	72.2725		parete laterale montaggio a muro destra	side panel wall mounted right	H=400mm	1
	72.5103		parete laterale montaggio a muro sinistra	side panel wall mounted left	H=700mm	1
	72.5156		parete laterale montaggio a muro destra	side panel wall mounted right	H=700mm	1

globalgastroparts.com - szervizaruhaz.hu

			unità batteria erogazione acqua	unit mixing unit			Large 72.3090.32 2/3 10.4.1995
Pos.	Produkt Nr.	Service Nr.	designatione	designation		Introduction	129
6	72.3061	1900 6952	bolzone	bolt	M5x14		2
7	72.3147		copertura superiore	filler upper			1
8	72.3171	1900 6951	bolzone	bolt			2
9	1701 3008	1900 6950	dado	nut			2
10	72.3758		parete posteriore fissaggio del suolo	rear panel bottom fixation	H=800mm		1
	72.4995		parete posteriore fissaggio del suolo	rear panel bottom fixation	H=700mm		2
	72.5147	Marine	parete posteriore fissaggio del suolo	rear panel bottom fixation	H=700mm		2
	72.4995		parete posteriore montaggio a muro	rear panel wall mounted	H=700mm		1
	72.5147	Marine	parete posteriore montaggio a muro	rear panel wall mounted	H=700mm		1
11	72.5976.01		tubo verticale	standing pipe		10/99	1
12	72.5917		tubo	tube	460mm	10/99	1
13	72.5919		anello di sostegno	retaining ring		10/99	1
14	712 044 480.14		anello	o-ring		10/99	1
15	705 840 150		tubo	tube			1
16	712 044 120.05	1101 8576	dado	captire nut	M5		3
17	72.3400		copertura	cover			1
18	72.3325		copertura	cover			1
19	72.3399		copertura	cover			1
20	72.0318.01		tubo	tube	460mm		1
21	72.0475		sostegno	support			1
22	72.0474		lamiera	sheet			1
23	1701 9003		disco	disk	M6		2
24	1701 5007		anello di molla	spring ring	M6		2
25	1701 2572		vite	screw	M6x10		2
26	1701 2632		vite	screw	M4x16		3
27	1701 3525		disco	disk	M5		3
31	72.0450		anello	ring			1
32	1701 5524	1900 6959	spina con filetto	threaded pin			3
33	72.0435		rosetta	rose			1
34	712 344 893.01	1900 6957	tubo flessibile	hose	1700 mm		2
35	1101 3797	1900 6958	guscio	sleeve			2
36	1101 2075	1900 6961	raccordo	connection			2

globalgastroparts.com - szervizaruhaz.hu

Pos.	Produkt Nr.	Service Nr.	designatione	designation		Introduction	129
37	712 344 884.01	1900 3024	batteria erogazione acqua	mixing unit			1
38	712 344 884.02	1900 3117	tubo	tube	300 mm		1
	712 344 884.03		tubo	tube	450 mm		
	712 344 884.04		tubo	tube	600 mm		
39	019 542	1901 6144	manetta rosso	knob red			1
40	019 541	1901 6143	manetta blu	knob blue			1
41		1900 6781	guarnizione	washer			2
42	32.40.12	1900 3084	femmina dell'animella completo	valve core complete			2
43		1 900 6730	guarnizione	washer			2
50	1105 1251		antigocce	drip stop		03/00	1
60	712 344 884.05		miscelatori a leva completo	mixer unit with lever handle complete		1999	1

globalgastroparts.com - szervizaruhaz.hu

Large 72.3090.35

01.95

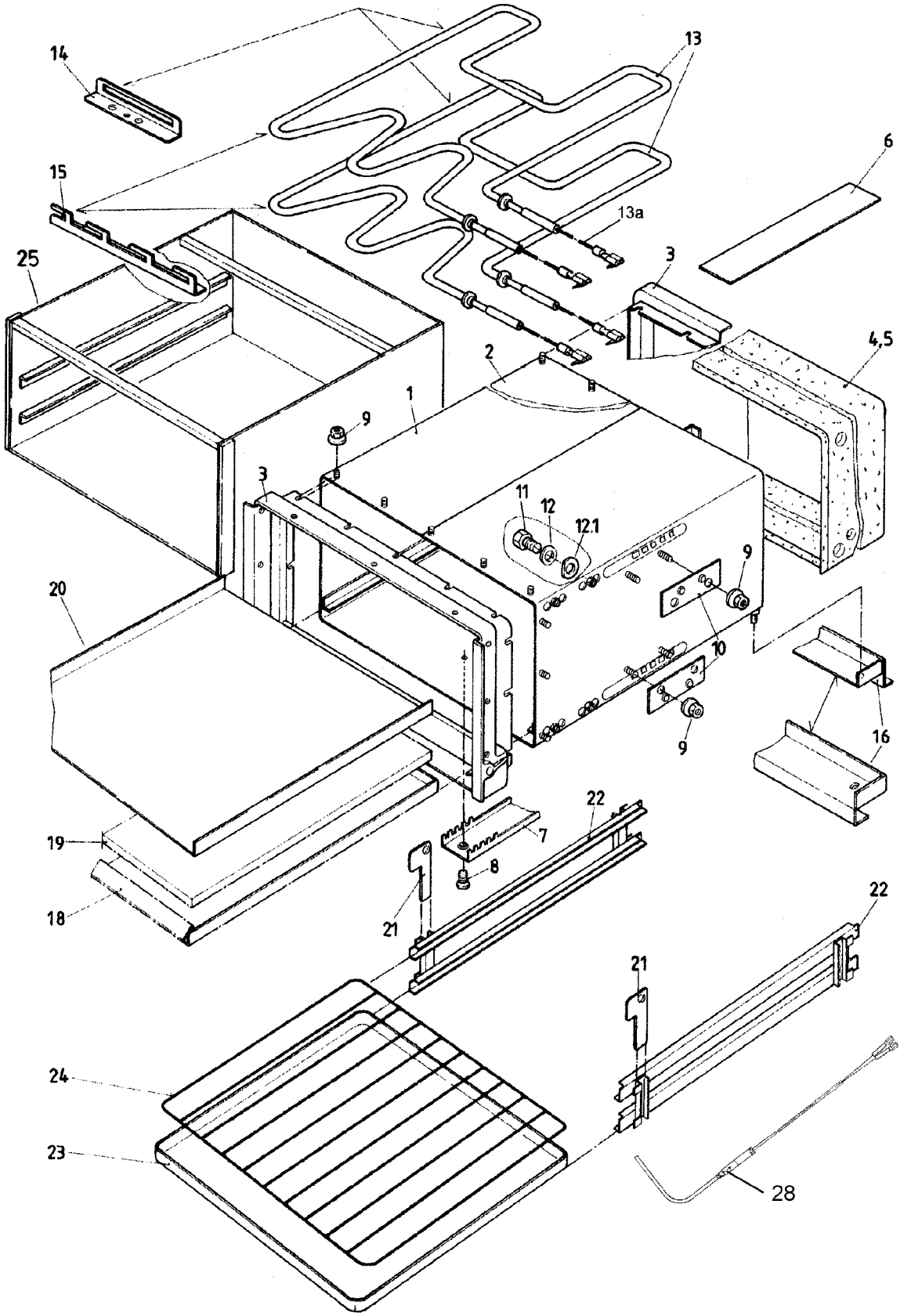

globalgastroparts.com - szervizaruhaz.hu

unità	unit	Large 72.3090.35
forno	baking oven	1
elettriche	electric	10.4.95

Pos.	Produkt Nr.	Service Nr.	designatione	designation		Intro.	259	359	259	359
1	72.0741		base/involucro	housing			1			
2	72.0802		base/involucro	housing					1	
3	719 010 021		telaio	frame			1		2	
4	72.0746.01		isolazione	insulation			1			
5	72.0807		isolazione	insulation					1	
6	1201 1688		nastro adesivo	adhesive strip			1		1	
7	72.0744		lamiera	fixation			1		1	
8	GR40186.1		vite	screw	M6x15		3		3	
9	712 044 120.06	1101 8577	dado	captire nut	M6		21		37	
10	719 040 247		sostegno	support			2		2	
	72.6614		sostegno	support		07/01	2		2	
11	1701 2509		vite	screw	M5x12		4		4	
12	1701 5004		anello di molla	spring ring	M5		4		4	
12.1	719 040 166		disco	disk	M5		4		4	
13	72.1797.01		riscaldamento	heating	200V		2		2	
	72.1797.02		riscaldamento	heating	230V		2		2	
	72.1797.03	1800 1816	riscaldamento	heating	400V		2		2	
	72.1797.04		riscaldamento	heating	415V		2		2	
	72.1797.05		riscaldamento	heating	440V		2		2	
	72.5054.01		riscaldamento	heating	200V	07/01	2		2	
	72.5054.02		riscaldamento	heating	230V	07/01	2		2	
	72.5054.03		riscaldamento	heating	400V	07/01	2		2	
	72.5054.04		riscaldamento	heating	415V	07/01	2		2	
	72.5054.05		riscaldamento	heating	440V	07/01	2		2	
13a	72.5282.01		cavo, sopre	cable, above		01/98	1		1	
	72.5282.02		cavo, in basso	cable, below		01/98	1		1	
	72.5266.01	Marine	cavo, sopre	cable, above		01/98	1		1	
	72.5266.02	Marine	cavo, in basso	cable, below		01/98	1		1	

globalgastroparts.com - szervizaruhaz.hu

	unità	unit			Large 72.3090.35
	forno	baking oven			2
	elettriche	electric			10.4.95

Pos.	Produkt Nr.	Service Nr.	designatione	designation		Intro.	259	359	259	359
14	72.1968		portatore dietro	girder back			4		4	
15	72.1969		portatore davanti	girder front			2		2	
16	72.0545		supporto	support			1			
18	719 830 077.02		placca	plate			1			
19	719 030 110.01		suolo con refrattario	fire clay plate			1			
20	719 830 077.01		placca	plate			1			
	719 830 045		placca	plate					1	
21	719 040 244	1900 9225	arresto	stopper			2		2	
22	719 830 071	1900 9223	guida di gratella	grid guide			1		1	
23	193 425.01	8090 0351	pasticciera	baking sheet			1		1	
24	1110 1300	8090 0337	gratella	grid			1		1	
25	72.2350		cassetta da introdurre completo	insert box complete	MARINE		1			
28	72.6428		sensore di temperatura	temperature sensor	ALCE	07/01	2		2	

globalgastroparts.com - szervizaruhaz.hu

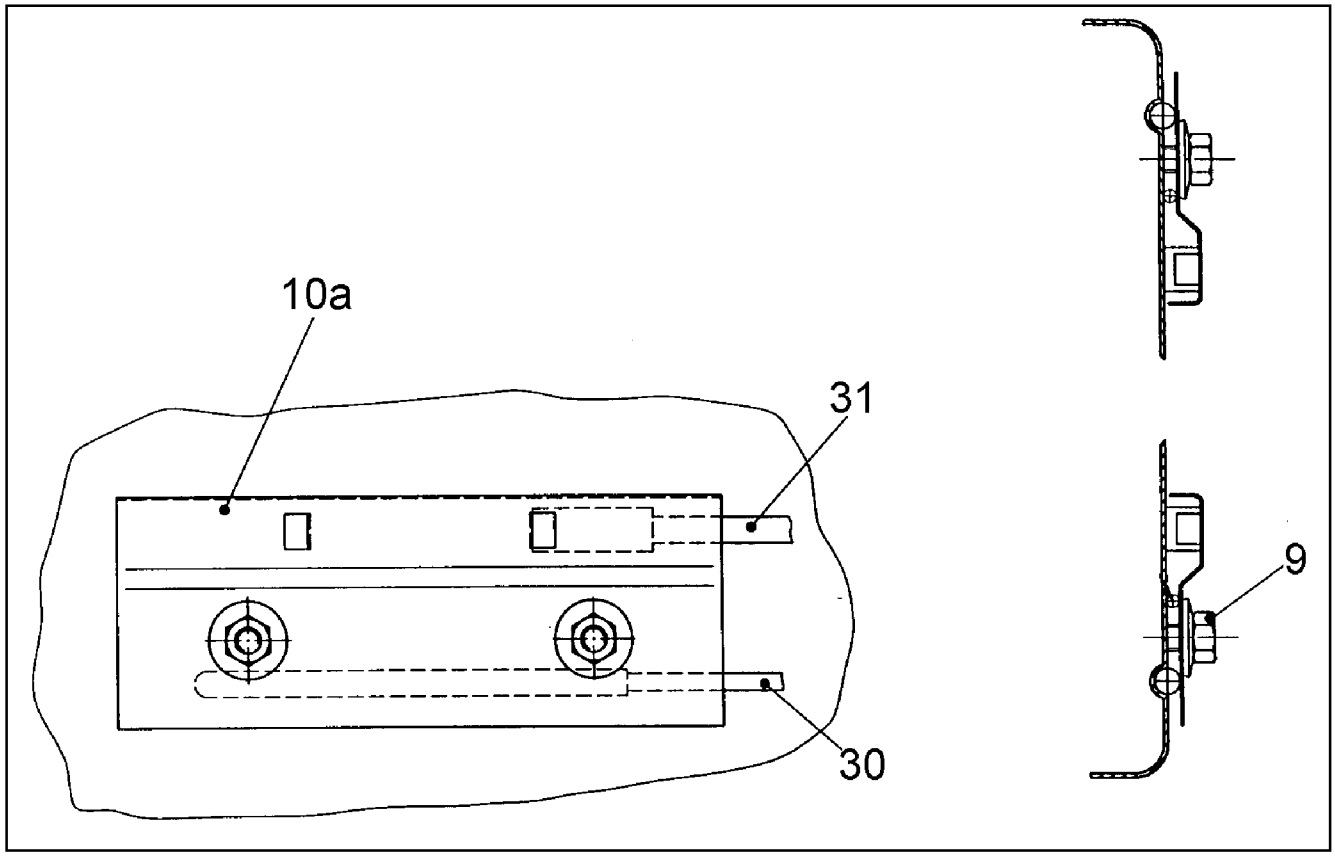

		Baugruppe	unité	unità	unit	Large 72.3090.35a
	MARINE ALEX / EMS	Backofen	four,	forno	baking oven	2
		elektrisch	electrique	elettriche	electric	06.98

Pos.	Produkt Nr.	Service Nr.	Bezeichnung	désignation	designatione	designation	259
10a	72.5386		Halter	fixation	sostegno	support	2
30	72.5290		Temperaturfühler	sonde de température	sensore di temperatura	temperature sensor	2
31	72.5289		Temperaturfühler	sonde de température	sensore di temperatura	temperature sensor	2

globalgastroparts.com - szervizaruhaz.hu

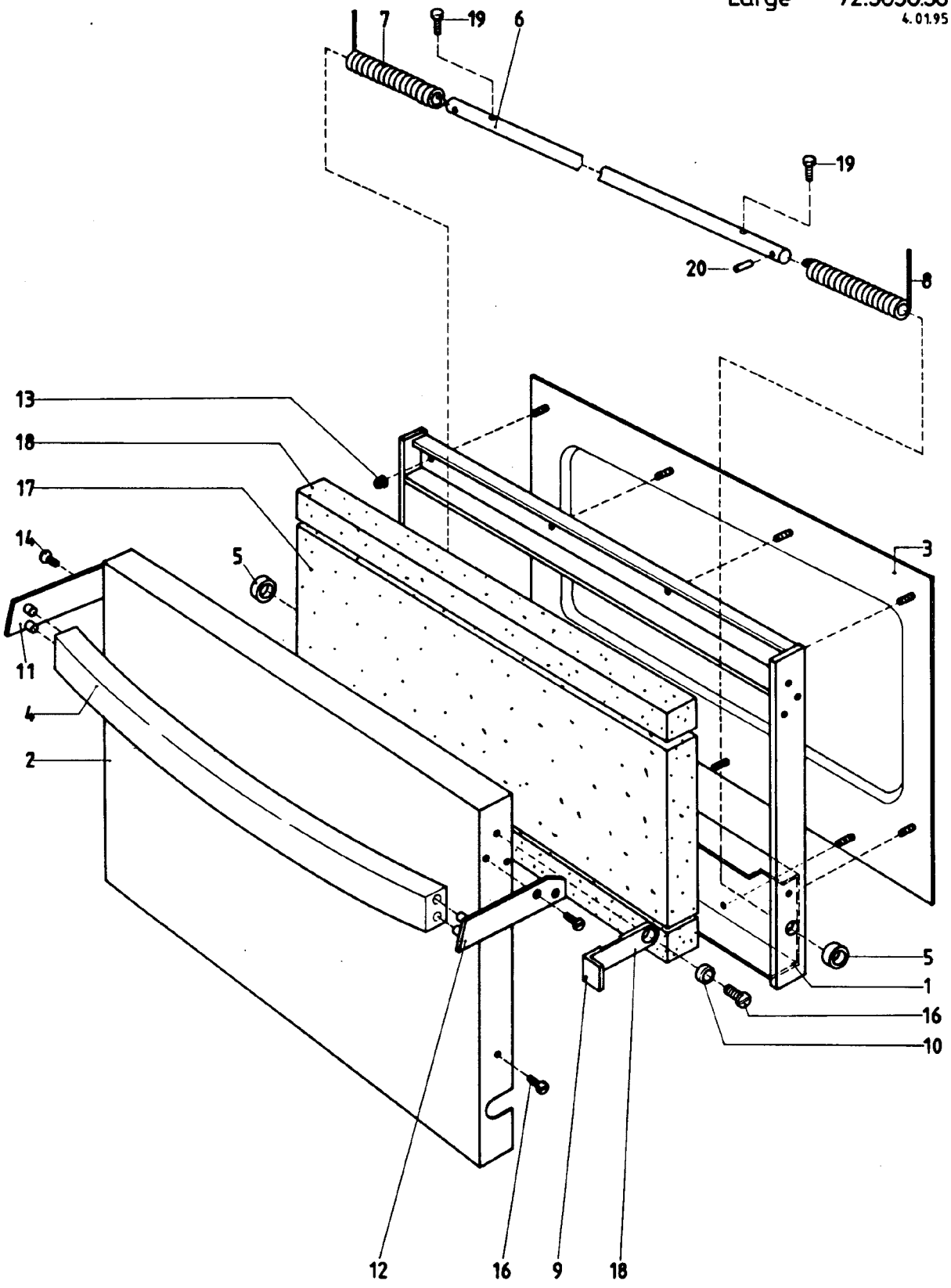

globalgastroparts.com - szervizaruhaz.hu

			Baugruppe	unité	unità	unit	Compact 72.3780.36 Large 72.3090.36
			Backofentüre	porte du four	porta di forno	baking oven door	1 10.4.95

Pos.	Produkt Nr.	Service Nr.	Bezeichnung	désignation	designatione	designation	
1	719 830 079		Türfüllung	remplissage de porte	empimento di porta	door filling	1
2	719 010 030		Türblech aussen	tôle de porte	lamiera di porta	door panel	1
3	719 810 080		Türblech innen	tôle de porte	lamiera di porta	door panel	1
4	72.2195	1900 6115	Stange	tige	asta	rod	1
5	719 040 197		Ring	anneau, bague	anello	ring	2
6	719 040 200		Welle	axe	albero	shaft	6
7	719 040 138	1900 1766	Feder links	ressort gauche	molla sinistra	spring left	1
8	719 040 139	1900 1767	Feder rechts	ressort droite	molla destra	spring right	1
9	719 040 262		Riegel	verrou	chiavistello	bar	1
10	719 040 263	1900 0381	Ring	anneau, bague	anello	ring	1
11	72.2824		Seitenteil links	fixation, gauche	sostegno, sinistra	support, left	1
12	72.2823		Seitenteil rechts	fixation, droite	sostegno, destra	support, right	1
13	712 044 120.06	1101 8577	Kepsmutter	écrou	dado	captire nut	16
14	1106 1122		Schraube	vis	vite	screw	4
16	10 3179		Schraube	vis	vite	screw	3
17	719 030 159		Isolation	isolation	isolazione	insulation	1
18	719 030 154		Isolation	isolation	isolazione	insulation	2
19	1701 2602		Schraube	vis	vite	screw	2
20	1701 1098		Stift	broche	spina	pivot	1

globalgastroparts.com - szervizaruhaz.hu

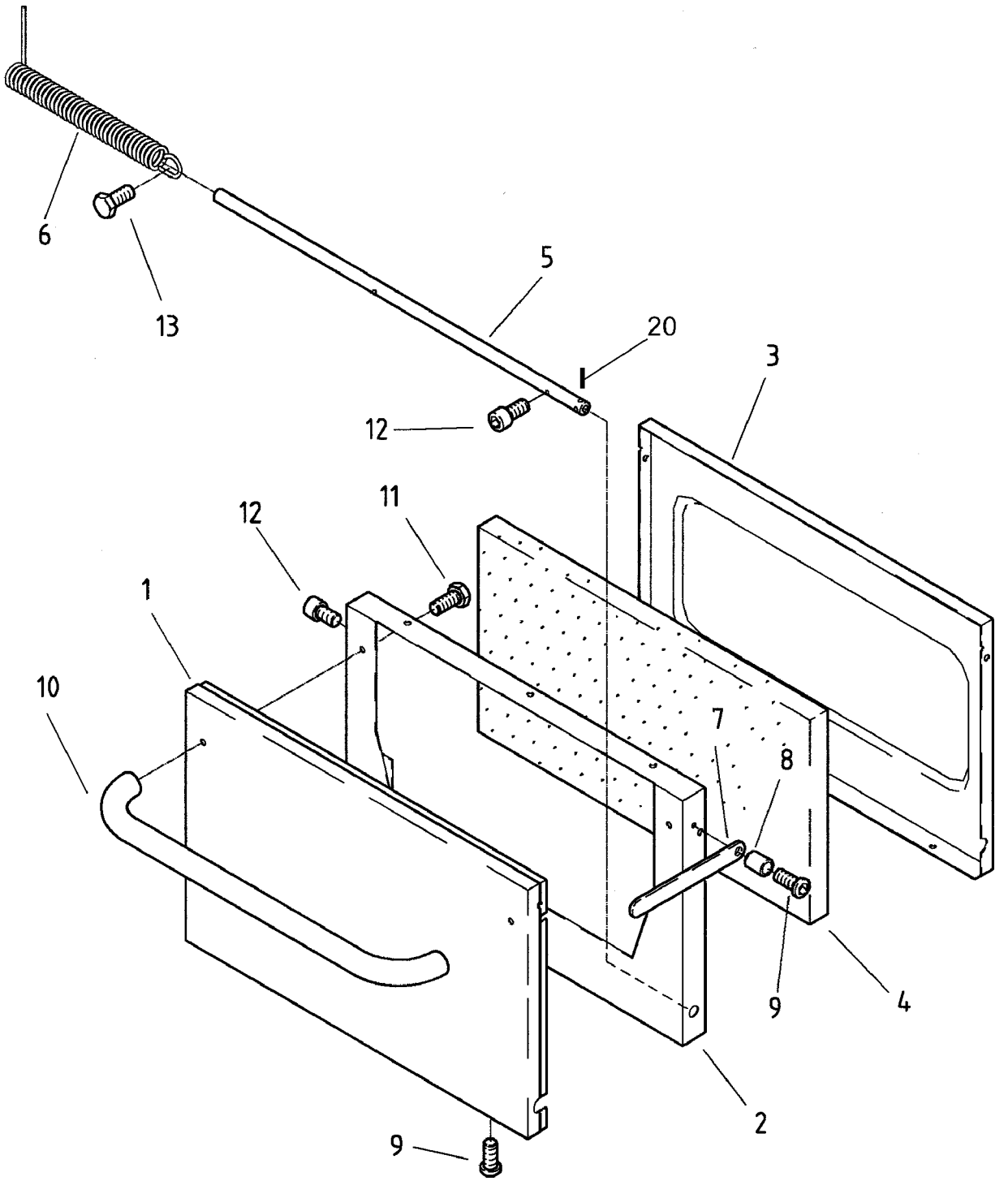

globalgastroparts.com - szervizaruhaz.hu

			Baugruppe	unité	unità	unit		Compact 72.3780.36a Large 72.3090.36a
			Backofentüre	porte du four	porta di forno	baking oven door		1 11.99
Pos.	Produkt Nr.	Service Nr.	Bezeichnung	désignation	designatione	designation		Introd.
1	72.5897		Türblech aussen	tôle de porte	lamiera di porta	door panel		1
2	72.5895		Rahmen	cadre	telaio	frame		1
3	72.5898		Türblech innen	tôle de porte	lamiera di porta	door panel		1
4	72.5896		Isolation	isolation	isolazione	insulation		1
5	72.5899		Welle	axe	albero	shaft		1
6	72.5891		Feder	ressort	molla	spring		1
7	72.5958		Riegel	verrou	chiavistello	bar		1
8	72.5959		Hülse	douille	manicotto	sleeve		1
9	103179		Schraube	vis	vite	screw	M5x12	4
10	72.5970		Griffstange	tige de poignée	asta della manetta	handle rod		1
11	1701 2567		Schraube	vis	vite	screw	M5x20	2
12	1101 8123		Schraube	vis	vite	screw	M5x12	1
13	1701 2602		Schraube	vis	vite	screw	M6x20	1
20	1701 1098		Stift	broche	spina	pivot		1
1-13	72.5900		Türe komplett	porte complet	porta completo	door complete		
1-13	719 810 063		Türe komplett	porte complet	porta completo	door complete	MARINE, H=413mm	

globalgastroparts.com - szervizaruhaz.hu

Compact 72.3780.37
Large 72.3090.37
4.01.95

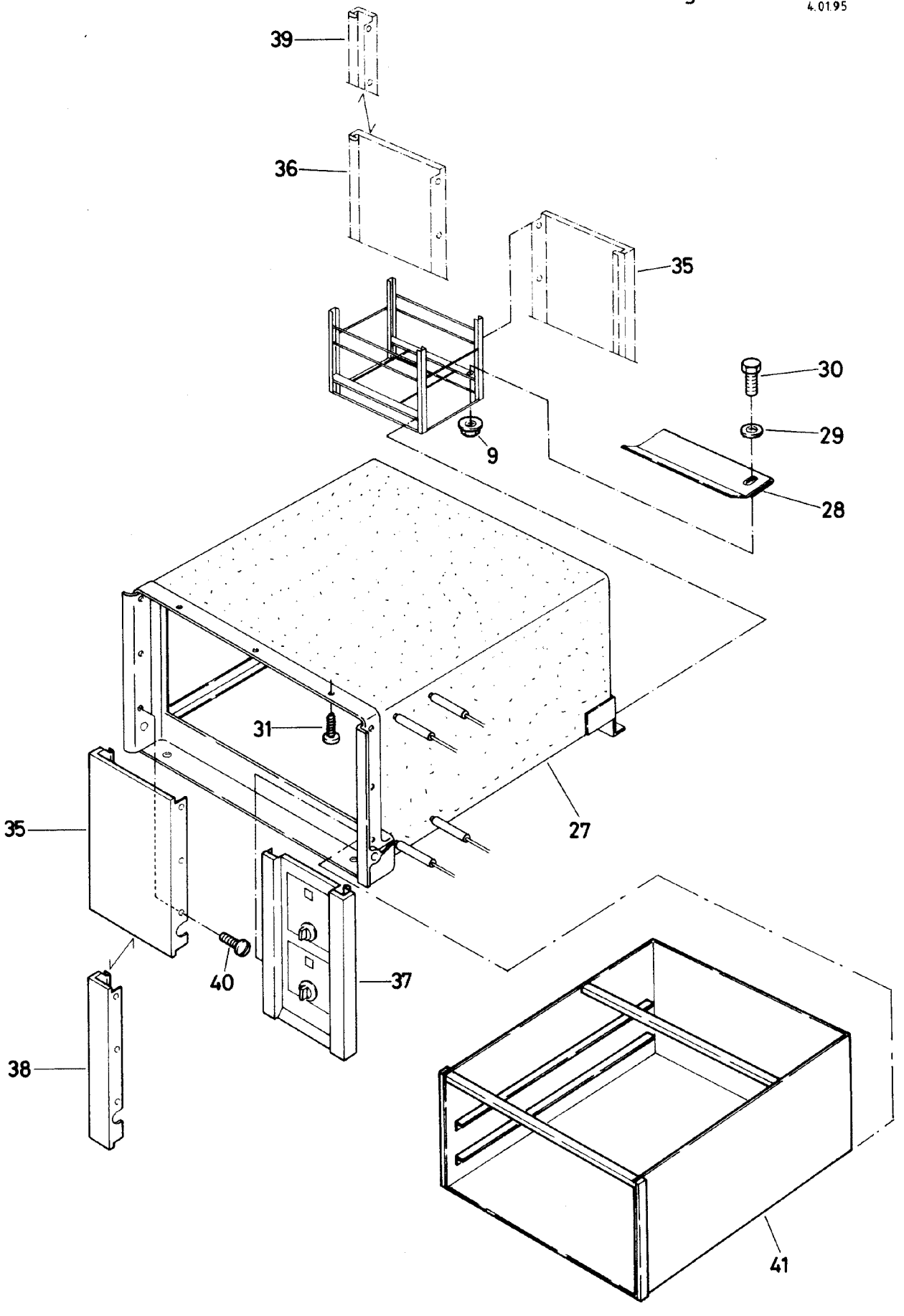

globalgastroparts.com - szervizaruhaz.hu

unità forno installazione	unit baking oven installation	Large 72.3090.37 1/1 10.4.95

Pos.	Produkt Nr.	Service Nr.	designatione	designation		259	259
27	(*) 72.3090.35		forno	baking oven		1	1
28	72.0546		sostegno	support		1	
29	1 701 5007		anello di molla	spring ring		4	4
30	1 701 2969		vite	screw		4	4
31	1 701 7502		vite	screw		3	6
35	72.2578		copertura sinistra	filler left	171		1
	72.2047		copertura sinistra	filler left	251	1	1
36	72.2046		copertura destra	filler right	251		1
37	(*) 72.3090.38		pannello di comando	control panel		1	1
38	72.2414		palo d'angolo sinistra	edge pole left		1	
39	72.2415		palo d'angolo destra	edge pole right			1
40	10 3179		vite	screw	M5x12	6	12
MARINE							
41	72.2350		telaio	frame		1	

(*) vedere see

globalgastroparts.com - szervizaruhaz.hu

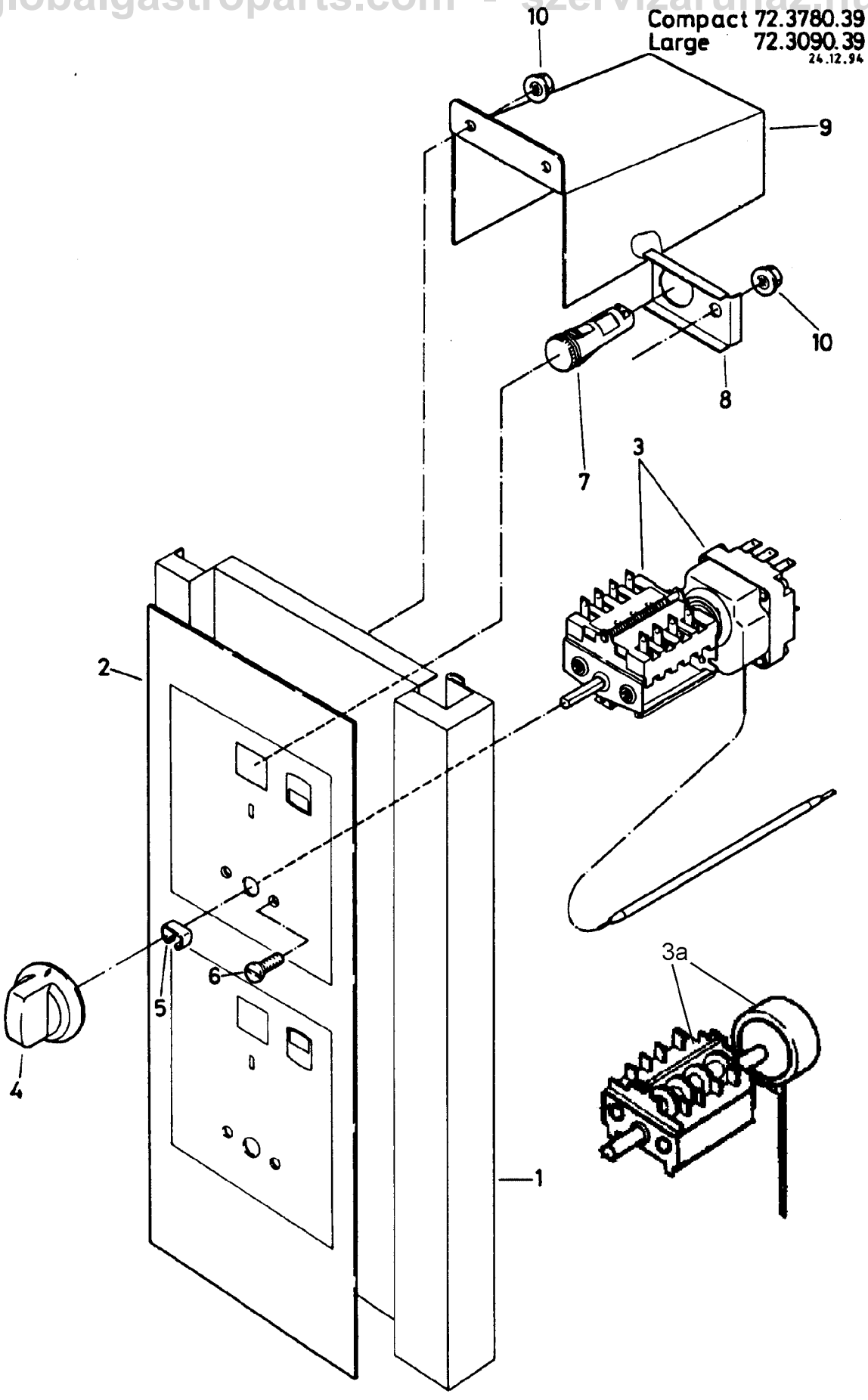

globalgastroparts.com - szervizaruhaz.hu

			unità	unit						Compact 72.3780.39 Large 72.3090.39
			pannello di comando	control panel						1/1
			forno	baking oven						10.4.1995
Pos.	Produkt Nr.	Service Nr.	designatione	designation		248	258	259	359	Intr.
1	72.2044		pannello di comando	control panel		1	1	1		
2	75.6507		lamiera	foil		1	1	1		
	72.6367		lamiera	foil	Electrolux	1	1	1		09.00
	72.6508		lamiera	foil					1	
	72.6368		lamiera	foil	Electrolux				1	09.00
3	712 844 013	1801 5456	regolatore	regulator		2	2	2		
3a	72.6355.02		regolatore ALCE	regulator ALCE	L=2,0m	2	2	2		07/01
4	72.2259.02	1900 6116	manetta	knob		2	2	2		
	72.5057		manetta	knob	ALCE	2	2	2		07/01
5	712 344 728	1901 6029	molla	spring		2	2	2		
6	1701 1006		vite	screw	M4x10	4	4	4		
7	1201 1865.01		lampada di comando	control lamp	200/230V	2	2	2		
	1201 1865.02	1800 2876	lampada di comando	control lamp	400-440V	2	2	2		
	72.5938.01		lampada di comando	control lamp	12V ALCE	2	2	2		07/01
	72.5938.06		portalampade verde	socket green	12V ALCE	2	2	2		07/01
8	72.2439		sostegno di lampada	lamp support		2	2	2		
	72.5066		sostegno di lampada	lamp support		2	2	2		07/01
9	72.3127		copertura	cover		2	2	2		
	72.6606		copertura	cover		2	2	2		07/01
10	712 044 120.05	1101 8576	dado	captire nut		6	6	6		

globalgastroparts.com - szervizanyag.hu

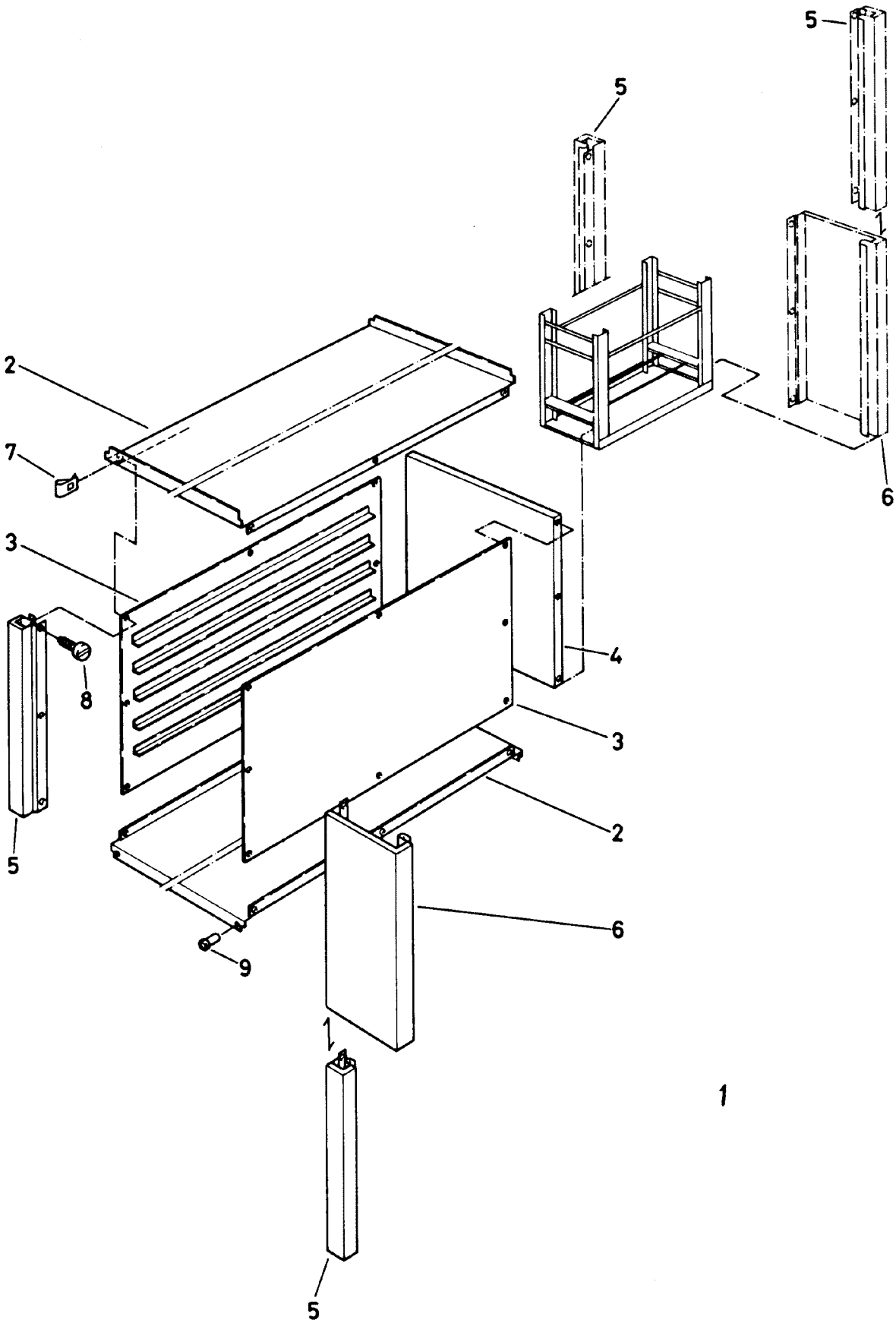

globalgastroparts.com - szervizaruhaz.hu

	Baugruppe Abstellraum	unité compartiment de rangement	unità spazio aperto	unit open compartment	Large 72.3090.65 1/1 10.4.1995

Pos.	Produkt Nr.	Service Nr.	Bezeichnung	désignation	designatione	designation		159	159
1	72.2670		Abstellraum kompl.	compartiment de rangement compl.	spazio aperto compl.	open compartment cpl.		1	
	72.6102.01	HY/BR	Abstellraum kompl.	compartiment de rangement compl.	spazio aperto compl.	open compartment cpl.		1	
	72.6102.02	HY/BL	Abstellraum kompl.	compartiment de rangement compl.	spazio aperto compl.	open compartment cpl.		1	
	72.6160.01	HY/BR/FL	Abstellraum kompl.	compartiment de rangement compl.	spazio aperto compl.	open compartment cpl.		1	
	72.6160.02	HY/BL/FL	Abstellraum kompl.	compartiment de rangement compl.	spazio aperto compl.	open compartment cpl.		1	
	72.2852		Abstellraum kompl.	compartiment de rangement compl.	spazio aperto compl.	open compartment cpl.			1
	72.6101	HY	Abstellraum kompl.	compartiment de rangement compl.	spazio aperto compl.	open compartment cpl.			1
	72.6159	HY/FL	Abstellraum kompl.	compartiment de rangement compl.	spazio aperto compl.	open compartment cpl.			1
2	705 020105		Deckel Boden	couvercle sol	coperchio suolo	lid base		2	2
3	705 810112		Seitenwand	paroi latérale	parete laterale	side panel		2	2
4	705 020107		Rückwand	paroi arrière	parete posteriore	rear panel		1	
5	72.2657		Eckpfosten	jambage d'angle	palo d'angolo	edge pole		1	2
6	72.2658		Blende	bandeau	copertura	filler		1	2
7	1 701 7538		Springmutter	écrou savonnette	dado puntellata	snap nut		16	16
8	1 701 7541		Schraube	vis	vite	screw	∅6	16	16
9	1 701 6515		Niete	rivet	rivetta	rivet		4	4

	Erklärung	**explication**	**spiegazione**	**explanation**
HY	Hygienemodell	modèle hygiénique	modello igienico	hygienic model
HS	Hauptschalter	interrupteur principal	interrutore generale	main interruptor
BR	Blende rechts	bandeau droite	copertura destra	filler right
BL	Blende links	bandeau gauche	copertura sinistra	filler left
FL	mit Flügeltüre	avec porte à battant	con porta a battenti	with wing door

globalgastroparts.com - szervizaruhaz.hu

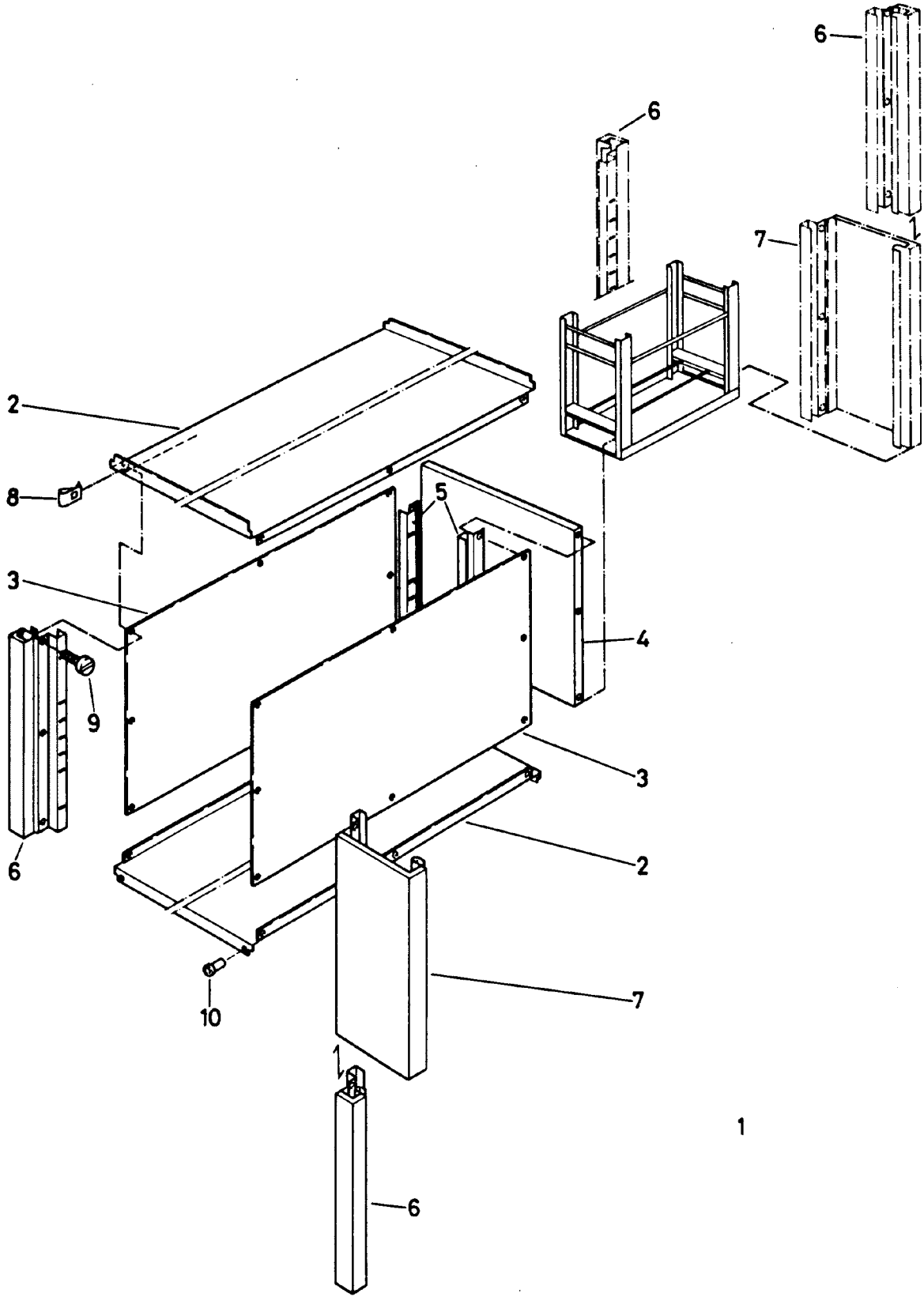

globalgastroparts.com - szervizaruhaz.hu

		unità spazio aperto	unit open compartment	Large 72.3090.70 1 10.4.1995

Pos.	Produkt Nr.	Service Nr.	designatione	designation	249	259	359	249	259	359
1	72.3352		spazio aperto compl.	open compartment cpl.	1					
	72.6106.01	HY/BR	spazio aperto compl.	open compartment cpl.	1					
	72.6164.01	HY/BR/FL	spazio aperto compl.	open compartment cpl.	1					
	72.6106.02	HY/BL	spazio aperto compl.	open compartment cpl.	1					
	72.6164.02	HY/BL/FL	spazio aperto compl.	open compartment cpl.	1					
	72.3353		spazio aperto compl.	open compartment cpl.				1		
	72.6105	HY	spazio aperto compl.	open compartment cpl.				1		
	72.6163	HY/FL	spazio aperto compl.	open compartment cpl.				1		
	72.2966		spazio aperto compl.	open compartment cpl.		1				
	72.6110.01	HY/BR	spazio aperto compl.	open compartment cpl.		1				
	72.6110.02	HY/BL	spazio aperto compl.	open compartment cpl.		1				
	72.6168.01	HY/BR/FL	spazio aperto compl.	open compartment cpl.		1				
	72.6168.02	HY/BL/FL	spazio aperto compl.	open compartment cpl.		1				
	72.2841		spazio aperto compl.	open compartment cpl.					1	
	72.6109	HY	spazio aperto compl.	open compartment cpl.					1	
	72.6167	HY/FL	spazio aperto compl.	open compartment cpl.					1	

globalgastroparts.com - szervizaruhaz.hu

		unità	unit		Large 72.3090.70
		spazio aperto	open compartment		2
					10.4.1995

Pos.	Produkt Nr.	Service Nr.	designatione	designation	249	259	359	249	259	359
1	72.3175		spazio aperto compl.	open compartment cpl.			1			
	72.3176		spazio aperto compl.	open compartment cpl.						1
2	705 020278		coperchio, fondo	lid, base	2			2		
	705 010103		coperchio, fondo	lid, base		2			2	
	705 010104		coperchio, fondo	lid, base			2			2
3	705 020106		parete laterale	side panel	2	2	2	2	2	2
4	705 020110		parete posteriore	rear panel	1					
	705 020113		parete posteriore	rear panel		1				
	705 020114		parete posteriore	rear panel			1			
5	705 020112		listello di regolazione	adjust strip	2	2	2			
6	72.2720		palo d'angolo	edge pole	1	1		2	2	

	spiegazione	**explanation**
HY	modello igienico	hygienic model
HS	interrutore generale	main interruptor
BR	copertura destra	filler right
BL	copertura sinistra	filler left
FL	con porta a battenti	with wing door

globalgastroparts.com - szervizaruhaz.hu

unità	unit		Large 72.3090.70
spazio aperto	open compartment		2
			10.4.1995

Pos.	Produkt Nr.	Service Nr.	designatione	designation	249	259	359	249	259	359
7	72.2718		copertura	filler	1	1	2	2	2	4
8	1 701 7538		dado puntellata	snap nut	16	16	16	16	16	16
9	1 701 7541		vite	screw	16	16	16	16	16	16
10	1 701 6515		rivetta	rivet	4	4	4	4	4	4

	spiegazione	**explanation**
HY	modello igienico	hygienic model
HS	interrutore generale	main interruptor
BR	copertura destra	filler right
BL	copertura sinistra	filler left
FL	con porta a battenti	with wing door

globalgastroparts.com - szervizaruhaz.hu

Compact 72.3780.75
Large 72.3090.75
23.9.94

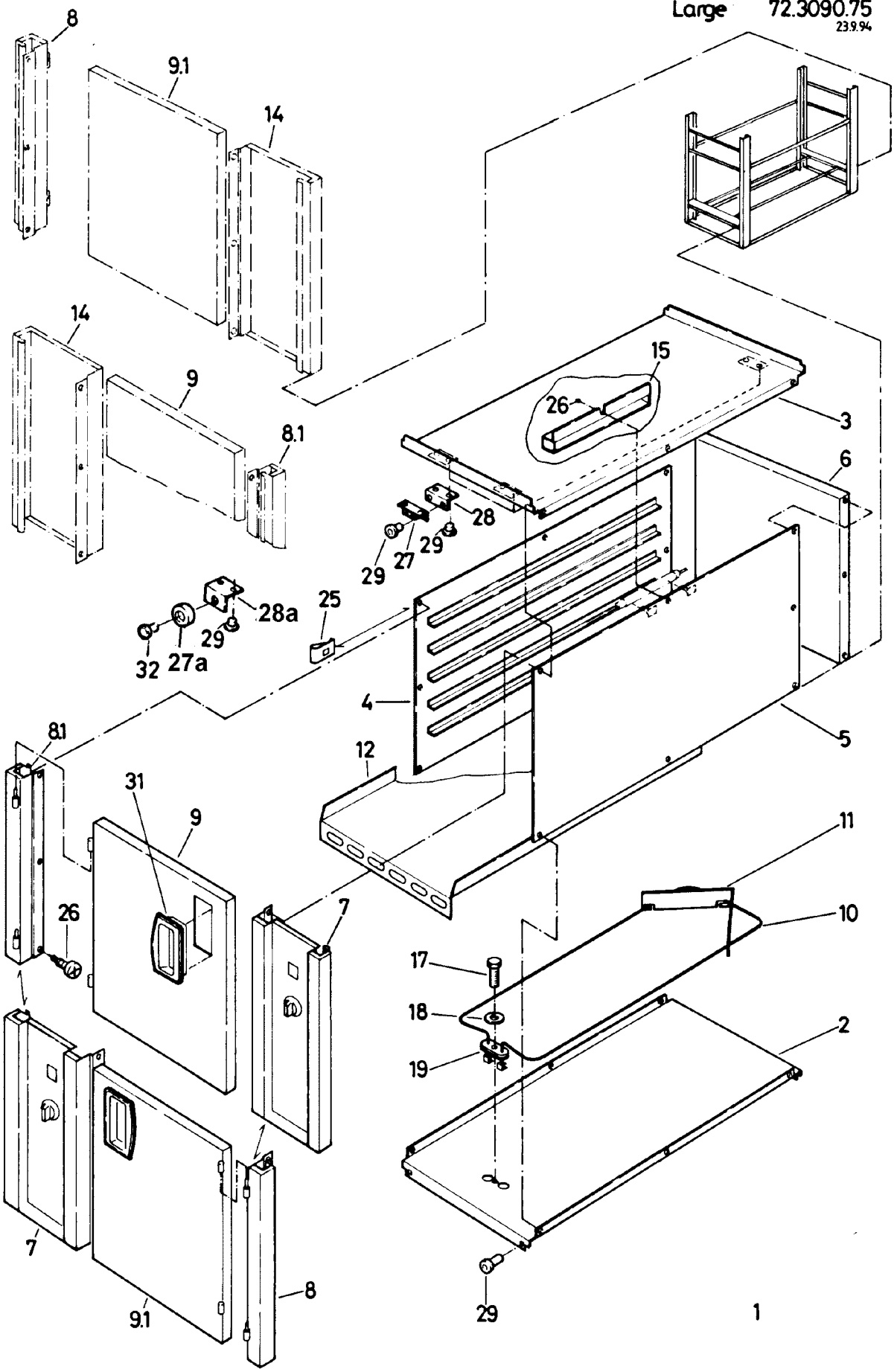

globalgastroparts.com - szervizaruhaz.hu

unità	unit	Large 72.3090.75
armadio riscaldante	hot cabinet	1
AC	HC	17.12.96

Pos.	Produkt Nr.	Service Nr.	designatione	designation		159	159
1	72.2989.XX		AC un lato pannello di comando destra	HC one side control panel right		1	
	72.3211.XX		AC un lato pannello di comando sinistra	HC one side control panel left		1	
	72.3212.XX		AC continuata pannello di comando destra	HC continuous control panel right			1
	72.3213.XX		AC continuata pannello di comando sinistra	HC continuous control panel left			1
2	72.3516		fondo	base		1	1
3	72.3092.01		coperchio	lid		1	
	72.3092.02		coperchio	lid			1
4	705 810112		parete laterale	side panel		1	1
5	705 820252		parete laterale	side panel		1	1
6	705 020107		parete posteriore	rear panel		1	
7	(*) 72.3090.90		pannello di comando	control panel		1	1
8	72.2669		palo d'angolo destra	edge pole right		(1)	1
8.1	72.2668		palo d'angolo sinistra	edge pole left		(1)	1
9	72.2675		porta a battenti	wing door		(1)	1
9.1	72.2726		porta a battenti	wing door		(1)	1
10	72.3512.01		riscaldamento	heating	200V 1kW	1	1
	72.3512.02		riscaldamento	heating	230V 1kW		
	72.3512.03	1 801 1708	riscaldamento	heating	400V 1kW		
	72.3512.04		riscaldamento	heating	415V 1kW		
	72.3512.05		riscaldamento	heating	440V 1kW		
11	772 030045		sostegno	support		1	1
12	705 820253		fondo	base		1	
	705 820254		fondo	base			1
14	72.2658		copertura	filler			1
15	72.4138		protezione	protection		1	1
17	1 101 8165		vite	screw		1	1

globalgastroparts.com - szervizaruhaz.hu

			unità armadio riscaldante	unit hot cabinet		Large 72.3090.75 2 17.12.96	
Pos.	Produkt Nr.	Service Nr.	designatione	designation		159	159
18	1701 5047		disco a molla	spring disk		1	1
19	72.1120	1 801 1709	guarnizione	washer		1	1
25	1701 7538		dado puntellata	snap nut		16	16
26	1701 7541		vite	screw		16	16
27	1115 1152	1 900 1265	magnete	magnet		1	2
27a	72.7151		magnete	magnet	09/97	1	2
28	705 040 364		angolo	angle		1	2
28a	72.4989		angolo	angle	09/97	1	2
29	1701 6515		rivetta	rivet	(09/97)	6 (4)	10 (8)
31	72.2099	1 900 6086	manetta	knob		1	2
32	1701 1094		rivetta	rivet	09/97	1	2
	(*)		vedere	see			

globalgastroparts.com - szervizaruhaz.hu

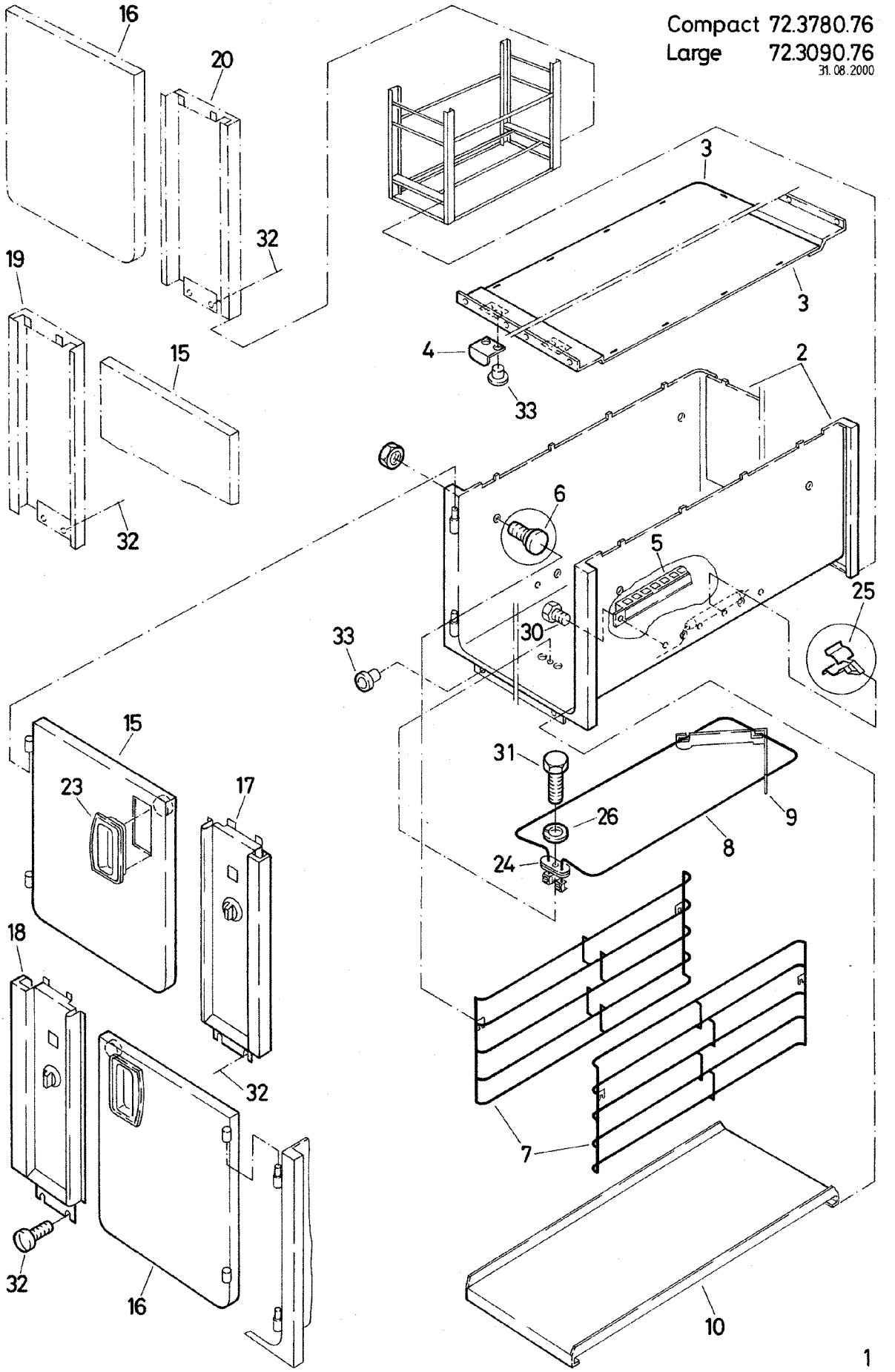

globalgastroparts.com - szervizaruhaz.hu

Doc. No.	Issue	IT	GB	Seite/ Page/ Pagina/ Page
72.3090.76	08/2000	Unità	Unit	1
LARGE 159		armadio riscaldante igienico 159	hot cupboard hygienic 159	

Pos.	Product No.	Service No.	Designatione	Designation	Type			Introduction
1	72.6263		pannello di comando destra	control panel right		1		08/2000
	72.6264		pannello di comando sinistra	control panel left		1		08/2000
	72.6267		pannello di comando destra	control panel right			1	08/2000
	72.6268		pannello di comando sinistra	control panel left			1	08/2000
2	72.6244.01		camicia cerniera destra	casing hinge right		1		08/2000
	72.6244.02		camicia cerniera sinistra	casing hinge left		1		08/2000
	72.6246.03		camicia cerniera destra	casing hinge right			1	08/2000
	72.6246.04		camicia cerniera sinistra	casing hinge left			1	08/2000
3	72.6311		coperchio	lid		1		08/2000
	72.6061		coperchio	lid			1	08/2000
4	72.6183		angolo	angle		1	2	08/2000
5	72.6251		protezione	protection		1	1	08/2000
6	72.6088		bolzone	bolt		4	4	08/2000
7	72.6087.01		gratella	grid		2		08/2000
	72.6087.03		gratella	grid			2	08/2000
8	72.3512.01		riscaldamento	heating	200V 1kW	1	1	08/2000
	72.3512.02		riscaldamento	heating	230V 1kW	1	1	08/2000
	72.3512.03		riscaldamento	heating	400V 1kW	1	1	08/2000
	72.3512.04		riscaldamento	heating	415V 1kW	1	1	08/2000
9	72.6257		sostegno	support		1	1	08/2000
10	72.6253		mensola	shelf		1		08/2000
	72.6249		mensola	shelf			1	08/2000
15	72.6122		porta cerniera sinistra	door hinge left		1	2	08/2000

globalgastroparts.com - szervizaruhaz.hu

Doc. No.	Issue	IT	GB	Seite/ Page/ Pagina/ Page
72.3090.76	08/2000	Unità	Unit	2
LARGE 159		armadio riscaldante igienico 159	hot cupboard hygienic 159	

Pos.	Product No.	Service No.	Designatione	Designation	Type			Introduction
16	72.6122		porta cerniera destra	door hinge right		1	2	08/2000
17	72.6259		pannello di comando	control panel		1	1	08/2000
18	72.6260		pannello di comando	control panel		1	1	08/2000
19	72.6051		copertura	filler			1	08/2000
20	72.6054		copertura	filler			1	08/2000
23	72.2090	1900 6086	manetta	knob		1	2	08/2000
24	72.1120	1801 1709	guarnizione	sealing		1	1	08/2000
25	1201 2020		sostegno	support		1	1	08/2000
26	1701 5047		anello della molla	spring ring		1	1	08/2000
30	1701 2703		per armadio	screw	M4x8	2	2	08/2000
31	1101 8129		per armadio	screw	M5x16	1	1	08/2000
32	1701 1541		per armadio	screw	M4x10	4	4	08/2000
33	1701 1547		rivetta	rivet		16	16	08/2000

globalgastroparts.com - szervizaruhaz.hu

Compact 72.3780.78
Large 72.3090.78
23.9.94

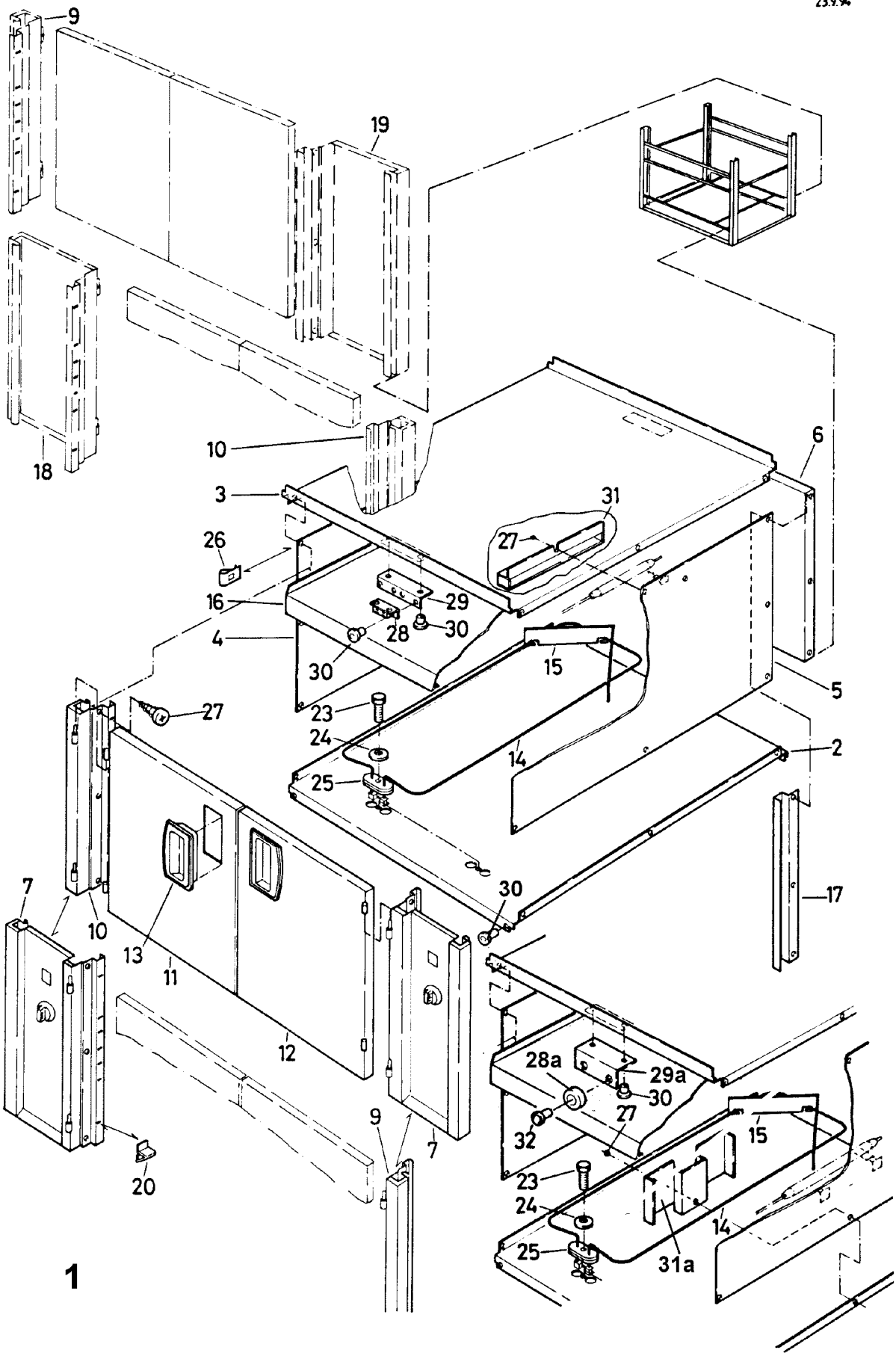

globalgastroparts.com - szervizaruhaz.hu

	unità armadio riscaldante AC	unit hot cabinet HC	Large 72.3090.78 1/2 17.12.96

Pos.	Produkt Nr.	Service Nr.	designatione	designation		249	249
1	72.3357.XX		AC un lato pannello di comando destra	HC one side control panel right		1	
	72.3359.XX		AC un lato pannello di comando sinistra	HC one side control panel left		1	
	72.3358.XX		AC continuata pannello di comando destra	HC continuous control panel right			1
	72.3360.XX		AC continuata pannello di comando sinistra	HC continuous control panel left			1
2	72.3518		fondo	base		1	1
3	72.3354.01		coperchio	lid		1	
	72.3354.02		coperchio	lid			1
4	705 020106		parete laterale	side panel		1	1
5	705 820105		parete laterale	side panel		1	1
6	705 020277		parete posteriore	rear panel		1	
7	(*) 72.3390.90		pannello di comando	control panel		1	1
9	72.2690		palo d'angolo destra	edge pole right		(1)	1
10	72.2691		palo d'angolo sinistra	edge pole left		(1)	1
11	72.2677		porta a battenti	wing door		1	2
12	72.2676		porta a battenti	wing door		1	2
13	72.2099	1 900 6086	manetta	knob		2	4
14	72.3512.01		riscaldamento	heating	200V 1kW	2	2
	72.3512.02		riscaldamento	heating	230V 1kW		
	72.3512.03	1 801 1708	riscaldamento	heating	400V 1kW		
	72.3512.04		riscaldamento	heating	415V 1kW		
	72.3512.05		riscaldamento	heating	440V 1kW		
15	772 030045		sostegno	support		2	2
16	705 020285		fondo	base		1	1
17	705 020 112		listello di regolazione	adjust strip		2	

globalgastroparts.com - szervizaruhaz.hu

Pos.	Produkt Nr.	Service Nr.	designatione	designation		249	249
18	72.3218		copertura destra	filler right			(1)
19	72.2713		copertura sinistra	filler left			(1)
20	705 040611	1 900 1261	portatore di tavola	shelf support		4	4
23	1 101 8165		vite	screw		2	2
24	1 701 5047		disco a molla	spring disk		2	2
25	72.1120	1 801 1709	guarnizione	washer		2	2
26	1 701 7538		dado puntellata	snap nut		16	16
27	1 701 7541		vite	screw		16	16
28	1 115 1152	1 900 1265	magnete	magnet		2	4
28a	72.7151		magnete	magnet	09/97	2	4
29	705 040 364		angolo	angle		1	2
29a	72.4990		angolo	angle	09/97	1	2
30	1 701 6515		rivetta	rivet		8	16
31	72.4138		protezione	protection		1	1
31a	705 020 247		protezione	protection	09/97	1	1
32	1701 1094		rivetta	rivet	09/97	2	4

(*) vedere see

globalgastroparts.com - szervizaruhaz.hu

Compact 72.3780.79
Large 72.3090.79
31.08.2000

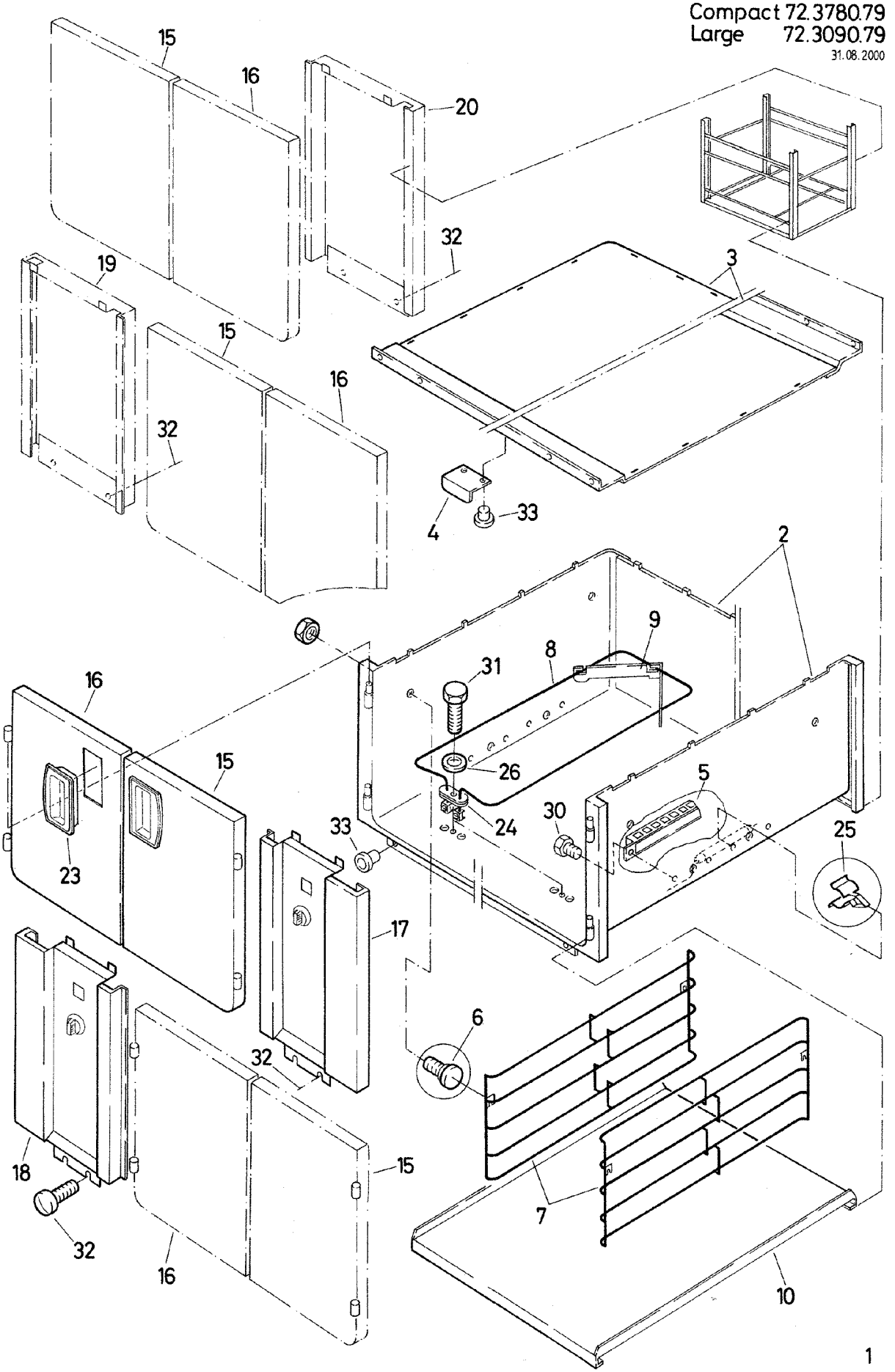

globalgastroparts.com - szervizaruhaz.hu

Doc. No.	Issue	IT	GB	Seite/ Page/ Pagina/ Page
72.3090.79	08/2000	Unità	Unit	1
LARGE 249		armadio riscaldante igienico 249	hot cupboard hygienic 249	

Pos.	Product No.	Service No.	Designatione	Designation	Type			Introduction
1	72.6275		pannello di comando destra	control panel right		1		08/2000
	72.6276		pannello di comando sinistra	control panel left		1		08/2000
	72.6279		pannello di comando destra	control panel right			1	08/2000
	72.6280		pannello di comando sinistra	control panel left			1	08/2000
2	72.6245.01		camicia	casing		1		08/2000
	72.6245.02		camicia	casing		1		08/2000
	72.6247.03		camicia	casing			1	08/2000
	72.6247.04		camicia	casing			1	08/2000
3	72.6074		coperchio	lid		1		08/2000
	72.6076		coperchio	lid			1	08/2000
4	72.6121		angolo	angle		1	2	08/2000
5	72.6251		protezione	protection		1	1	08/2000
6	72.6088		bolzone	bolt		4	4	08/2000
7	72.6087.01		gratella	grid		2		08/2000
	72.6087.03		gratella	grid			2	08/2000
8	72.3512.01		riscaldamento	heating	200V 1kW	2	2	08/2000
	72.3512.02		riscaldamento	heating	230V 1kW	2	2	08/2000
	72.3512.03		riscaldamento	heating	400V 1kW	2	2	08/2000
	72.3512.04		riscaldamento	heating	415V 1kW	2	2	08/2000
9	72.6257		sostegno	support		2	2	08/2000
10	72.6256		mensola	shelf		1		08/2000
	72.6255		mensola	shelf			1	08/2000
15	72.6135		porta cerniera destra	door hinge right		2	4	08/2000

globalgastroparts.com - szervizaruhaz.hu

Doc. No.	Issue	IT	GB	Seite/ Page/ Pagina/ Page
72.3090.79	08/2000	Unità	Unit	2
LARGE 249		armadio riscaldante igienico 249	hot cupboard hygienic 249	

Pos.	Product No.	Service No.	Designatione	Designation	Type			Introduction
16	72.6138		porta cerniera sinistra	door hinge left		2	4	08/2000
17	72.6261.01		pannello di comando	control panel	200/230V	1	1	08/2000
	72.6261.02		pannello di comando	control panel	400/415V	1	1	08/2000
18	72.6262.01		pannello di comando	control panel	200/230V	1	1	08/2000
	72.6262.02		pannello di comando	control panel	400/415V	1	1	08/2000
19	72.6089		copertura	filler			1	08/2000
20	72.6092		copertura	filler			1	08/2000
23	72.2090	1900 6086	manetta	knob		2	4	08/2000
24	72.1120	1801 1709	guarnizione	sealing		2	2	08/2000
25	1201 2020		sostegno	support		1	1	08/2000
26	1701 5047		anello della molla	spring ring		2	2	08/2000
30	1701 2703		per armadio	screw	M4x8	2	2	08/2000
31	1101 8129		per armadio	screw	M5x16	2	2	08/2000
32	1701 1541		per armadio	screw	M4x10	4	4	08/2000
33	1701 1547		rivetta	rivet		16	16	08/2000

globalgastroparts.com - szervizaruhaz.hu

Compact 72.3780.80
Large 72.3090.80

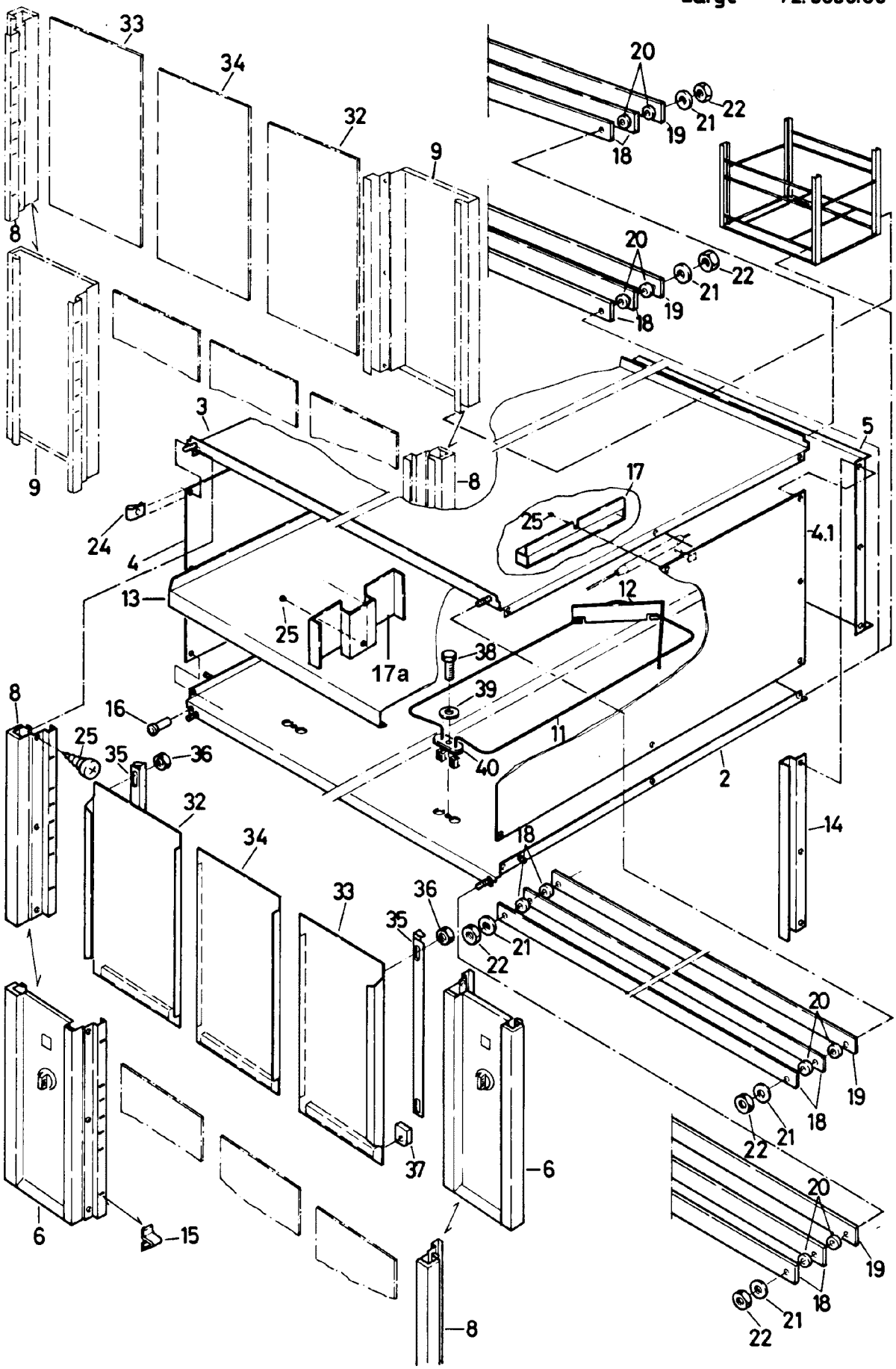

globalgastroparts.com - szervizaruhaz.hu

unità	unit	Large 72.3090.80
armadio riscaldante	hot cabinet	1
AC	HC	17.12.96

Pos.	Produkt Nr.	Service Nr.	designatione	designation		259	359	259	359
1	72.3220.XX		AC un lato	HC one side		1			
	72.3224.XX		pannello di comando destra	control panel right			1		
	72.3222.XX		AC un lato	HC one side		1			
	72.3225.XX		pannello di comando sinistra	control panel left			1		
	72.2714.XX		AC continuata	HC continuous				1	
	72.3226.XX		pannello di comando destra	control panel right					1
	72.3223.XX		AC continuata	HC continuous				1	
	72.3227.XX		pannello di comando sinistra	control panel left					1
2	72.3521		fondo	base		1		1	
	72.3523		fondo	base			1		1
3	705 820 103		coperchio	lid		1		1	
	705 820 104		coperchio	lid			1		1
4	705 020 106		parete laterale	side panel		1	1	1	1
	705 820 105		parete laterale	side panel		1	1	1	1
5	705 020 113		parete posteriore	rear panel		1			
	705 020 114		parete posteriore	rear panel			1		
6	siehe 72.3090.90		pannello di comando	control panel		1	1	1	1
8	72.2720		palo d'angolo	edge pole		1		2	
9	72.2718		copertura	filler			1	1	3
11	72.3512.01		riscaldamento	heating	200V	2	3	2	3
	72.3512.02		riscaldamento	heating	230V				
	72.3512.03	1801 1708	riscaldamento	heating	400V				
	72.3512.04		riscaldamento	heating	415V				
	72.3512.05		riscaldamento	heating	440V				
12	772 030 045		sostegno	support		2	3	2	3
13	72.3683		tavola, ripiano	shelf		1	1	1	1
14	705 020 112		listello di regolazione	adjust strip		2	2		
15	705 040 611	1900 1261	portatore di tavola	shelf support		4	4	4	4

globalgastroparts.com - szervizaruhaz.hu

			unità	unit					Large 72.3090.80
			armadio riscaldante	hot cabinet					2
									17.12.96

Pos.	Produkt Nr.	Service Nr.	designatione	designation		259	359	259	359
16	1701 6515		rivetta	rivet		4	4	4	4
17	72.4138		protezione	protection		1	1	1	1
17a	705 020 247		protezione	protection	09/97		1		118
	72.2446		stecca, guida	rail		4		8	
	72.3240		stecca, guida	rail			4		8
19	72.2447		stecca, guida	rail		2		4	
	72.3241		stecca, guida	rail			2		4
20	705 040 124		disco	disk		12	12	24	24
21	1701 5004		disco a molla	spring disk		6	6	12	12
22	1701 3008		dado	nut		6	6	12	12
24	1701 7538		dado puntellata	snap nut		16	16	16	16
25	1701 7541		vite	screw		16	16	16	16
32	705 830 119		porta glissante sinistra	sliding door left		1		2	
	705 830 121	1900 9242	porta glissante sinistra	sliding door left			1		2
33	705 830 120	1900 9241	porta glissante destra	sliding door right		1		2	
	705 830 122	1900 9243	porta glissante destra	sliding door right			1		2
34	705 830 123	1900 9244	porta glissante mezzo	sliding door middle		1		2	
	705 830 124		porta glissante mezzo	sliding door middle			1		2
35	705 030 405		angolo	angle		2	2	4	4
36	1701 3010	1101 8579	dado	nut		4	4	8	8
37	705 040310	1900 0021	cursore	glider		6	6	12	12
38	1101 8165		vite	screw		2	3	2	3
39	1701 5047		disco a molla	spring disk		2	3	2	3
40	72.1120	1801 1709	guarnizione	washer		2	3	2	3

globalgastroparts.com - szervizkonyv.hu

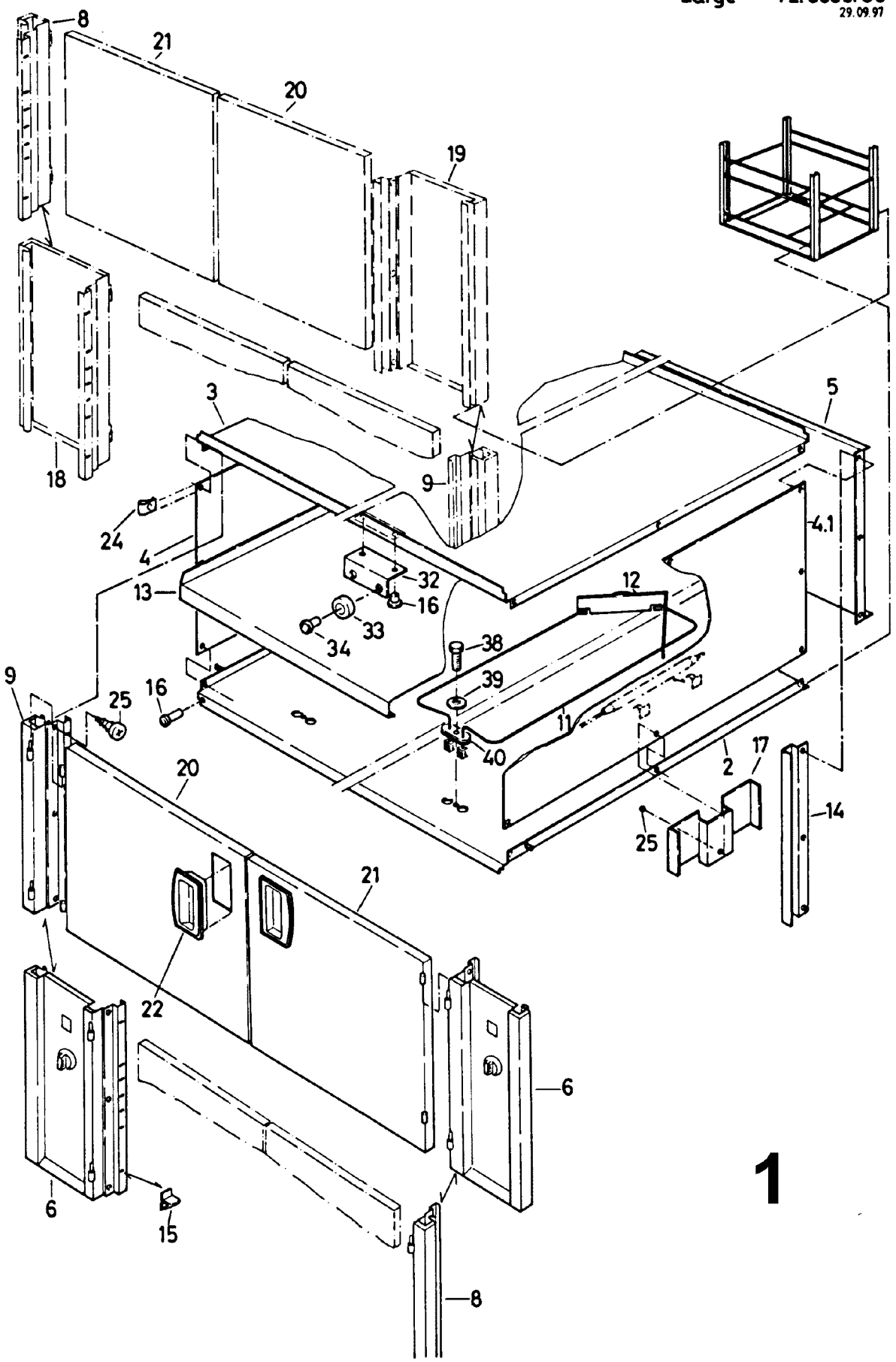

1

globalgastroparts.com - szervizaruhaz.hu

		unità	unit	Large 72.3090.85
		armadio riscaldante	hot cabinet	1
		AC	HC	09.97

Pos.	Produkt Nr.	Service Nr.	designatione	designation		259	259
1	72.4943.XX		AC un lato pannello di comando destra	HC one side control panel right		1	
	72.4978.XX		AC un lato pannello di comando sinistra	HC one side control panel left		1	
	72.4979.XX		AC continuata pannello di comando destra	HC continuous control panel right			1
	72.4980.XX		AC continuata pannello di comando sinistra	HC continuous control panel left			1
2	72.4947		fondo	base		1	1
3	72.4180.01		coperchio	lid		1	
	72.4180.02		coperchio	lid			1
4	705 020106		parete laterale	side panel		1	1
	705 820105		parete laterale	side panel		1	1
5	705 020113		parete posteriore	rear panel		1	
6	siehe 72.3090.90		pannello di comando	control panel		1	1
8	72.2690		palo d'angolo	edge pole		(1)	1
9	72.2691		copertura	filler		(1)	1
11	72.3512.01		riscaldamento	heating	200V	2	2
	72.3512.02		riscaldamento	heating	230V		
	72.3512.03	1801 1708	riscaldamento	heating	400V		
	72.3512.04		riscaldamento	heating	415V		
	72.3512.05		riscaldamento	heating	440V		
12	772 030 045		sostegno	support		2	2
13	72.3683		tavola, ripiano	shelf		1	1
14	705 020 112		listello di regolazione	adjust strip		2	
15	705 040 611	1900 1261	portatore di tavola	shelf support		4	4
16	1701 6515		rivetta	rivet		4	6
17	705 020 247		protezione	protection	09/97	1	1

globalgastroparts.com - szervizaruhaz.hu

		unità armadio riscaldante	unit hot cabinet	Large 72.3090.85 2 09.97

Pos.	Produkt Nr.	Service Nr.	designatione	designation	259	259
18	72.3218		copertura	filler		(1)
19	72.2713		copertura	filler		(1)
20	72.4185		porta a battenti	wing door	1	2
21	72.4187		porta a battenti	wing door	1	2
22	72.2099	1900 6086	manetta	knob	2	4
24	1701 7538		dado puntellata	snap nut	16	16
25	1701 7541		vite	screw	16	16
32	72.4990		angolo	angle	1	2
33	72.7151		magnete	magnet	1	2
34	1701 1094		rivetta	rivet	1	2
38	1101 8165		vite	screw	2	2
39	1701 5047		disco a molla	spring disk	2	2
40	72.1120	1801 1709	guarnizione	washer	2	2

globalgastroparts.com - szervizeruhaz.hu

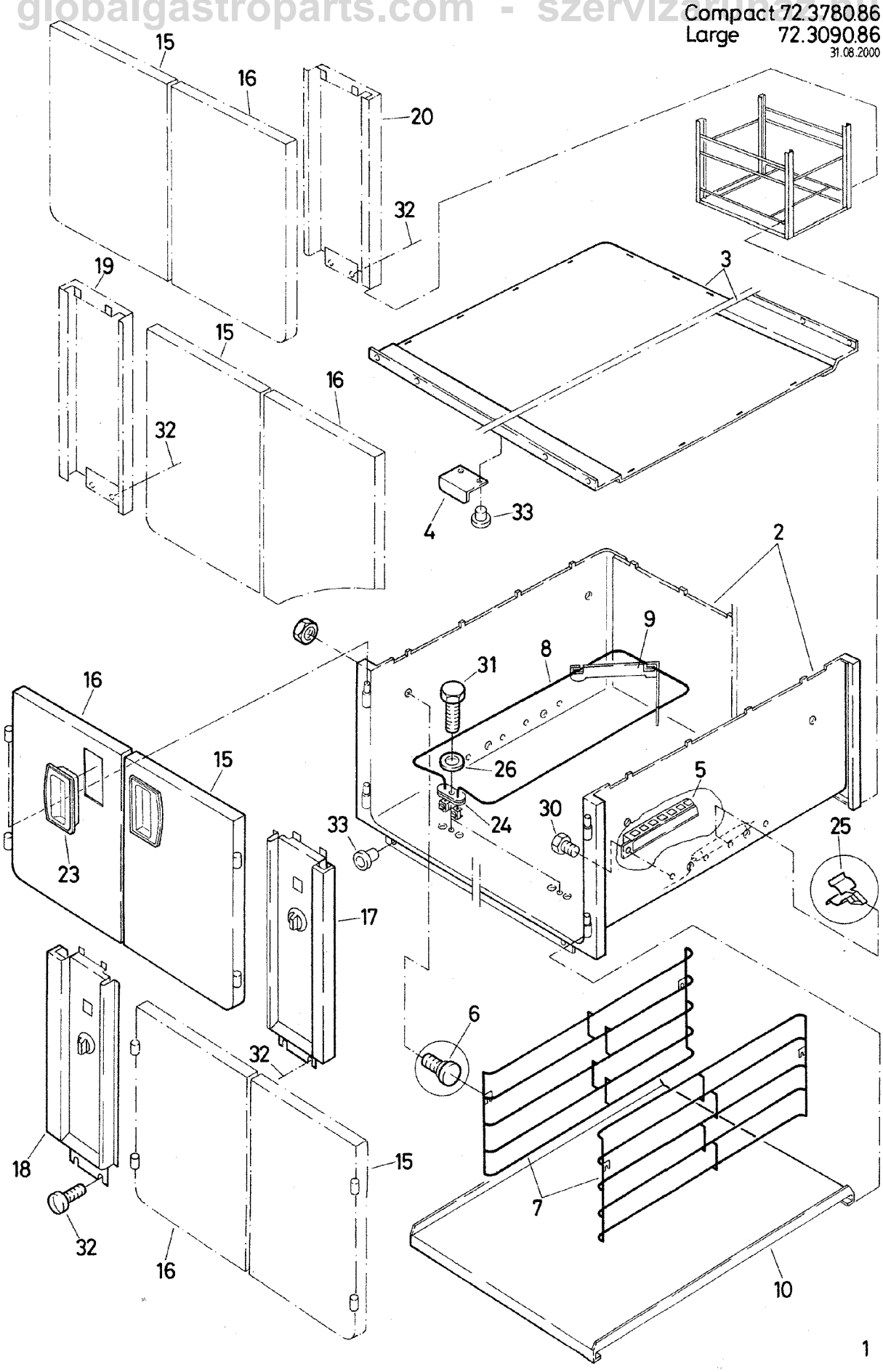

globalgastroparts.com - szervizaruhaz.hu

Doc. No.	Issue	IT	GB	Seite/ Page/ Pagina/ Page
72.3090.86	08/2000	Unità	Unit	1
LARGE 259		armadio riscaldante igienico 259	hot cupboard hygienic 259	

Pos.	Product No.	Service No.	Designatione	Designation	Type		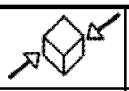	Introduction
1	72.6270		pannello di comando destra	control panel right		1		08/2000
	72.6269		pannello di comando sinistra	control panel left		1		08/2000
	72.6273		pannello di comando destra	control panel right			1	08/2000
	72.6274		pannello di comando sinistra	control panel left			1	08/2000
2	72.6243.01		camicia	casing		1		08/2000
	72.6243.02		camicia	casing		1		08/2000
	72.6234.03		camicia	casing			1	08/2000
	72.6234.04		camicia	casing			1	08/2000
3	72.6042		coperchio	lid		1		08/2000
	72.6043		coperchio	lid			1	08/2000
4	72.6121		angolo	angle		1	2	08/2000
5	72.6251		protezione	protection		1	1	08/2000
6	72.6088		bolzone	bolt		4	4	08/2000
7	72.6087.01		gratella	grid		2		08/2000
	72.6087.03		gratella	grid			2	08/2000
8	72.3512.01		riscaldamento	heating	200V 1kW	2	2	08/2000
	72.3512.02		riscaldamento	heating	230V 1kW	2	2	08/2000
	72.3512.03		riscaldamento	heating	400V 1kW	2	2	08/2000
	72.3512.04		riscaldamento	heating	415V 1kW	2	2	08/2000
9	72.6257		sostegno	support		2	2	08/2000
10	72.6252		mensola	shelf		1		08/2000
	72.6248		mensola	shelf			1	08/2000
15	72.6113		porta cerniera destra	door hinge right		2	4	08/2000

globalgastroparts.com - szervizaruhaz.hu

Doc. No.	Issue	IT	GB	Seite/ Page/ Pagina/ Page
72.3090.86	08/2000	Unità	Unit	2
LARGE 259		armadio riscaldante igienico 259	hot cupboard hygienic 259	

Pos.	Product No.	Service No.	Designatione	Designation	Type			Introduction
16	72.6116		porta cerniera sinistra	door hinge left		2	4	08/2000
17	72.6241.01		pannello di comando	control panel	200/230V	1	1	08/2000
	72.6241.02		pannello di comando	control panel	400/415V	1	1	08/2000
18	72.6258.01		pannello di comando	control panel	200/230V	1	1	08/2000
	72.6258.02		pannello di comando	control panel	400/415V	1	1	08/2000
19	72.6049		copertura	filler			1	08/2000
20	72.6047		copertura	filler			1	08/2000
23	72.2090	1900 6086	manetta	knob		2	4	08/2000
24	72.1120	1801 1709	guarnizione	sealing		2	2	08/2000
25	1201 2020		sostegno	support		1	1	08/2000
26	1701 5047		anello della molla	spring ring		2	2	08/2000
30	1701 2703		per armadio	screw	M4x8	2	2	08/2000
31	1101 8129		per armadio	screw	M5x16	2	2	08/2000
32	1701 1541		per armadio	screw	M4x10	4	4	08/2000
33	1701 1547		rivetta	rivet		16	16	08/2000

globalgastroparts.com - szervizanyag.hu

Compact 72.3780.88
Large 72.3090.88
31.01.97

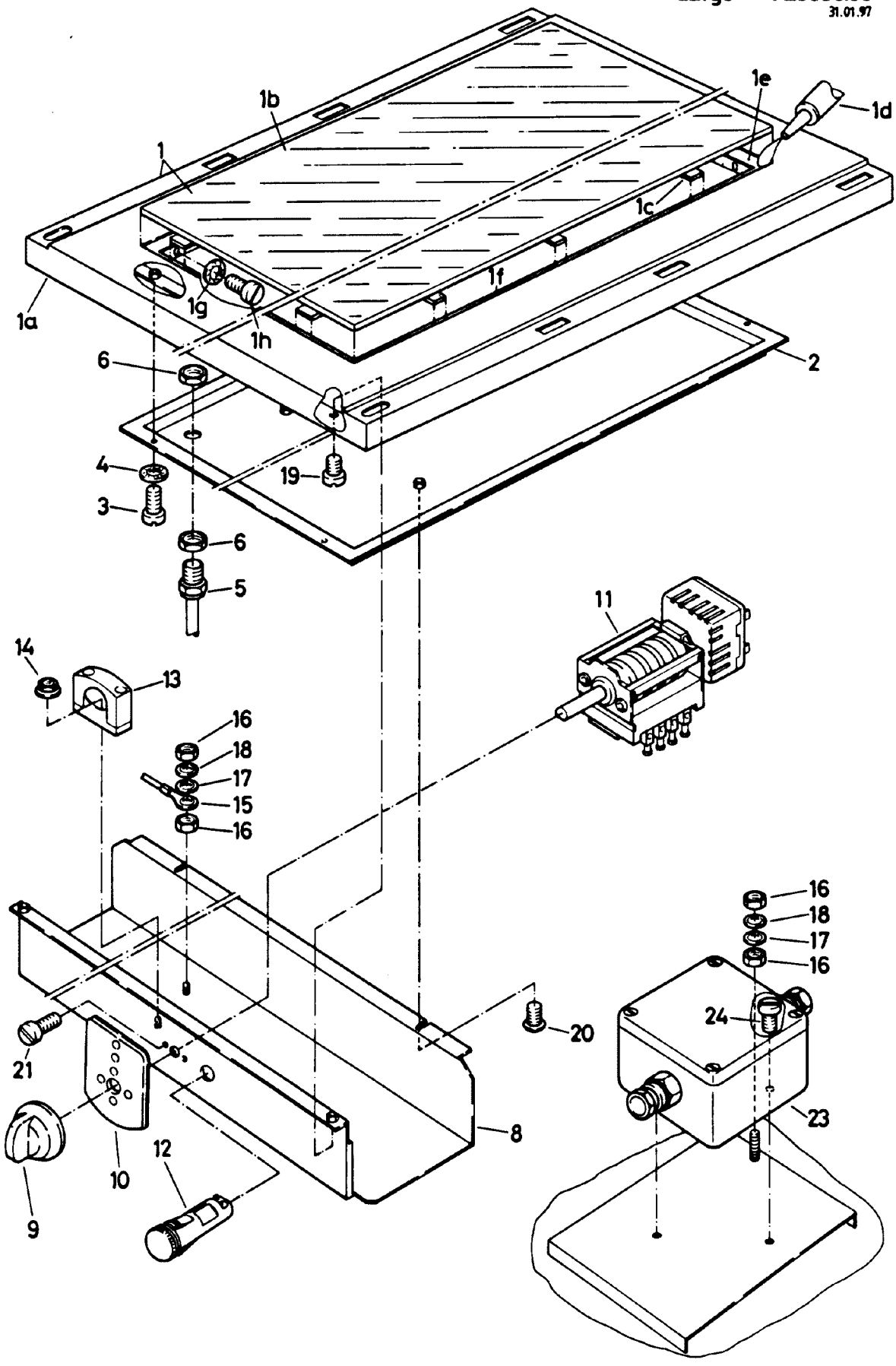

globalgastroparts.com - szervizaruhaz.hu

			unità piastra riscaldante parte superiore	unit hotplate upper part		Compact 72.3780.88 Large 72.3090.88 1/2 31.1.97	
Pos.	Produkt Nr.	Service Nr.	designatione	designation	Abmessung	800	900
1	73.0073.01		copertura	cover	700x800	1	
	73.0073.02		copertura	cover	800x800	1	
	73.0073.03		copertura	cover	900x800	1	
	73.0073.04		copertura	cover	1000x800	1	
	73.0064.02		copertura	cover	700x900		1
	73.0064.04		copertura	cover	800x900		1
	73.0064.06		copertura	cover	900x900		1
	73.0064.08		copertura	cover	1000x900		1
1a	73.0072.01		placca di copertura	cover plate		1	
	73.0072.02		placca di copertura	cover plate		1	
	73.0072.03		placca di copertura	cover plate		1	
	73.0072.04		placca di copertura	cover plate		1	
	73.0067.02		placca di copertura	cover plate			1
	73.0067.04		placca di copertura	cover plate			1
	73.0067.06		placca di copertura	cover plate			1
	73.0067.08		placca di copertura	cover plate			1
1b	73.0050.02	1800 1000	placca in ceramica	ceramic plate		1	1
	73.0050.03	1800 1001	placca in ceramica	ceramic plate		1	1
1c	1 201 1444	1802 5483	sostegno	base		10	10
1d	1 201 1792	1201 1948	colla	adhesive		%	%
1e	73.0055.01		supporto	support		2	2
	73.0055.02		supporto	support			2
	73.0055.03		supporto	support		2	2
1f	73.0055.02		supporto	support		2	2
	73.0055.03		supporto	support			2
1g	1 701 7060		disco	disk	M 4	8	8
1h	1 701 2019		vite	screw	M 4x8	8	8
2	73.0056		vasca	tray	500x600	1	
	73.0057		vasca	tray	600x800		1
3	1 701 2035		vite	screw	M 5x10	4	4
4	1 701 7002		disco	disk	M 5	4	4
5	12.6359		collegamento	fitting	PG11	1	1
6	1 103 1530		dado	nut	PG11	2	2

globalgastroparts.com - szervizaruhaz.hu

Pos.	Produkt Nr.	Service Nr.	designatione	designation		Introd.	Abmessung	800	900
8	73.0062.01		base	housing			700	1	1
	73.0062.02		base	housing			800	1	1
	73.0062.03		base	housing			900	1	1
	73.0062.04		base	housing			1000	1	1
9	72.2256.01	1900 6070	manetta	knob			30°-110°	1	1
10	72.2213	1900 6954	piastra	plate				1	1
	72.6390		piastra	plate	Electrolux	09.00		1	1
11	72.4082	1801 5470	interruttore	interruptor				1	1
12	72.4574.01	1801 5471	lampada	lamp				1	1
13	1116 1077		brida	shackle				1	1
14	712 044 120.04		dado	nut			M 4	1	1
15	73.0108		cavo	cable				1	1
16	1701 3016		dado	nut				4	4
17	1701 4003		disco	disk			∅6.4x12.5x1.6	2	2
18	1701 4007		anello di molla	spring ring			M 6	2	2
19	10.3179		vite	screw			M 5	2	2
20	1701 1541		vite	screw			M 4x10	2	2
21	1701 2019		vite	screw			M 4x8	2	2
23	72.4089		raccordo	connection				1	1
24	1701 2019		vite	screw			M 4x8	2	2

globalgastroparts.com - szervizcentrum.hu

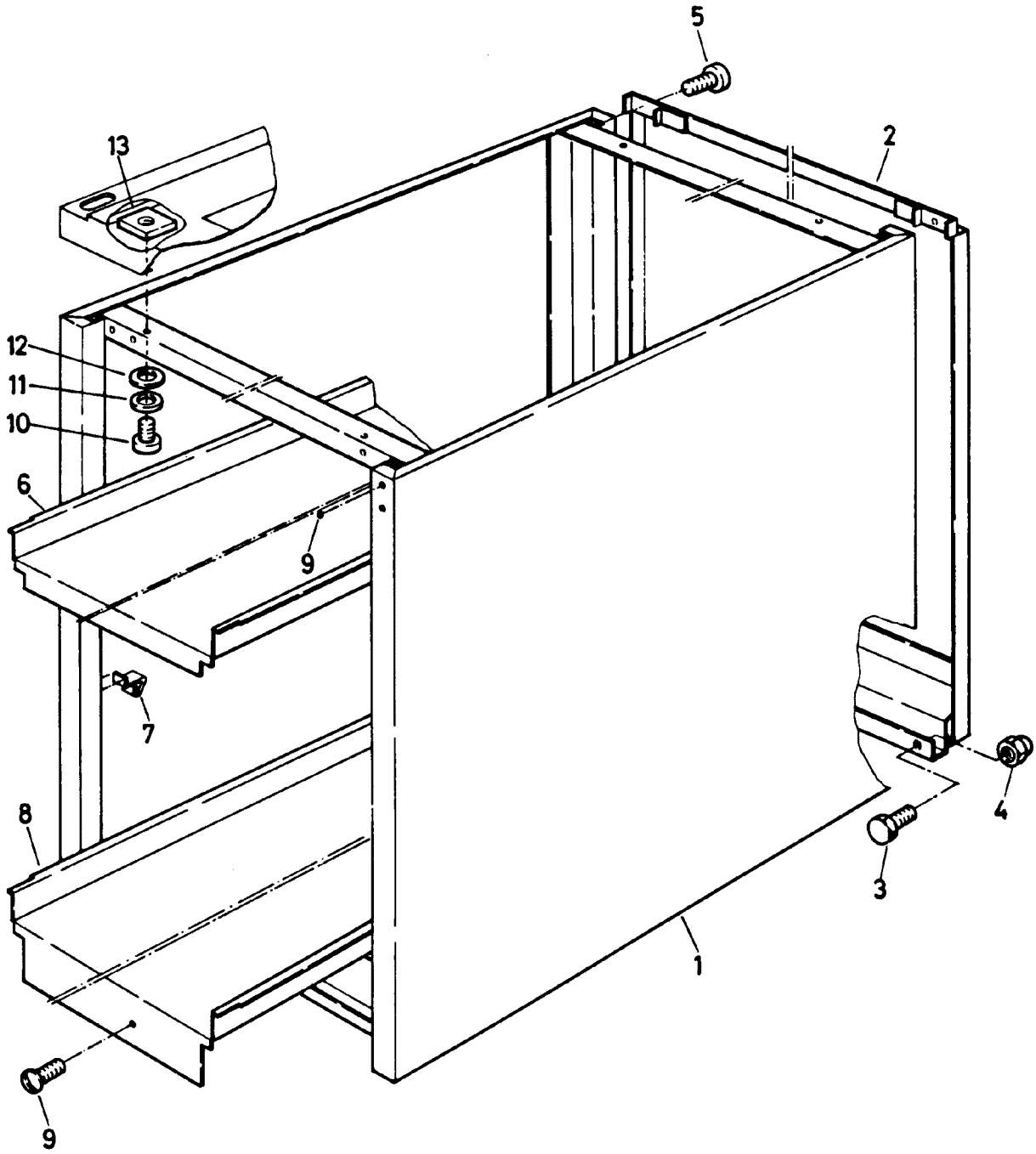

globalgastroparts.com - szervizaruhaz.hu

			unità piastra riscaldante telaio	unit hotplate frame		Compact 72.3780.89 Large 72.3090.89 1/1 31.1.97	
Pos.	Produkt Nr.	Service Nr.	designatione	designation	Abmessung	800	900
1	73.0080.01		telaio	frame	700x800	1	
	73.0080.02		telaio	frame	800x800	1	
	73.0080.03		telaio	frame	900x800	1	
	73.0080.04		telaio	frame	1000x800	1	
	73.0080.05		telaio	frame	700x900		1
	73.0080.06		telaio	frame	800x900		1
	73.0080.07		telaio	frame	900x900		1
	73.0080.08		telaio	frame	1000x900		1
2	72.0411.07		parete posteriore	rear panel	700	1	1
	72.0411.08		parete posteriore	rear panel	800	1	1
	72.0411.09		parete posteriore	rear panel	900	1	1
	72.0411.10		parete posteriore	rear panel	1000	1	1
3	1 701 2633		vite	screw	M5x6	3	3
4	1 701 3061		dado	nut	M5	3	3
5	1 701 2622		vite	screw	M5x20	2	2
6	72.2704.07		tavola, ripiano	shelf	B = 700	1	
	72.2704.08		tavola, ripiano	shelf	B = 800	1	
	72.2704.09		tavola, ripiano	shelf	B = 900	1	
	72.2704.10		tavola, ripiano	shelf	B = 1000	1	
	72.2804.07		tavola, ripiano	shelf	B = 700		1
	72.2804.08		tavola, ripiano	shelf	B = 800		1
	72.2804.09		tavola, ripiano	shelf	B = 900		1
	72.2804.10		tavola, ripiano	shelf	B = 1000		1
7	705 040611		supporto	support		4	4
8	73.0079.07		tavola, ripiano	shelf	B = 700	1	
	73.0079.08		tavola, ripiano	shelf	B = 800	1	
	73.0079.09		tavola, ripiano	shelf	B = 900	1	
	73.0079.10		tavola, ripiano	shelf	B = 1000	1	
	73.0078.07		tavola, ripiano	shelf	B = 700		1
	73.0078.08		tavola, ripiano	shelf	B = 800		1
	73.0078.09		tavola, ripiano	shelf	B = 900		1
	73.0078.10		tavola, ripiano	shelf	B = 1000		1
9	GR40 186.1		vite	screw	M6x15	12	12
10	1 701 2569		vite	screw	M6x16	4	4
11	1 701 5007		anello di molla	spring ring	M6	4	4
12	1 701 4003		disco	disk	∅6.4x12.5x1.6	4	4
13	76 133.70		dado	nut	M6	4	4

globalgastroparts.com - szervizanyag.hu

Compact 72. 3780.90+a
Large 72. 3090.90+a

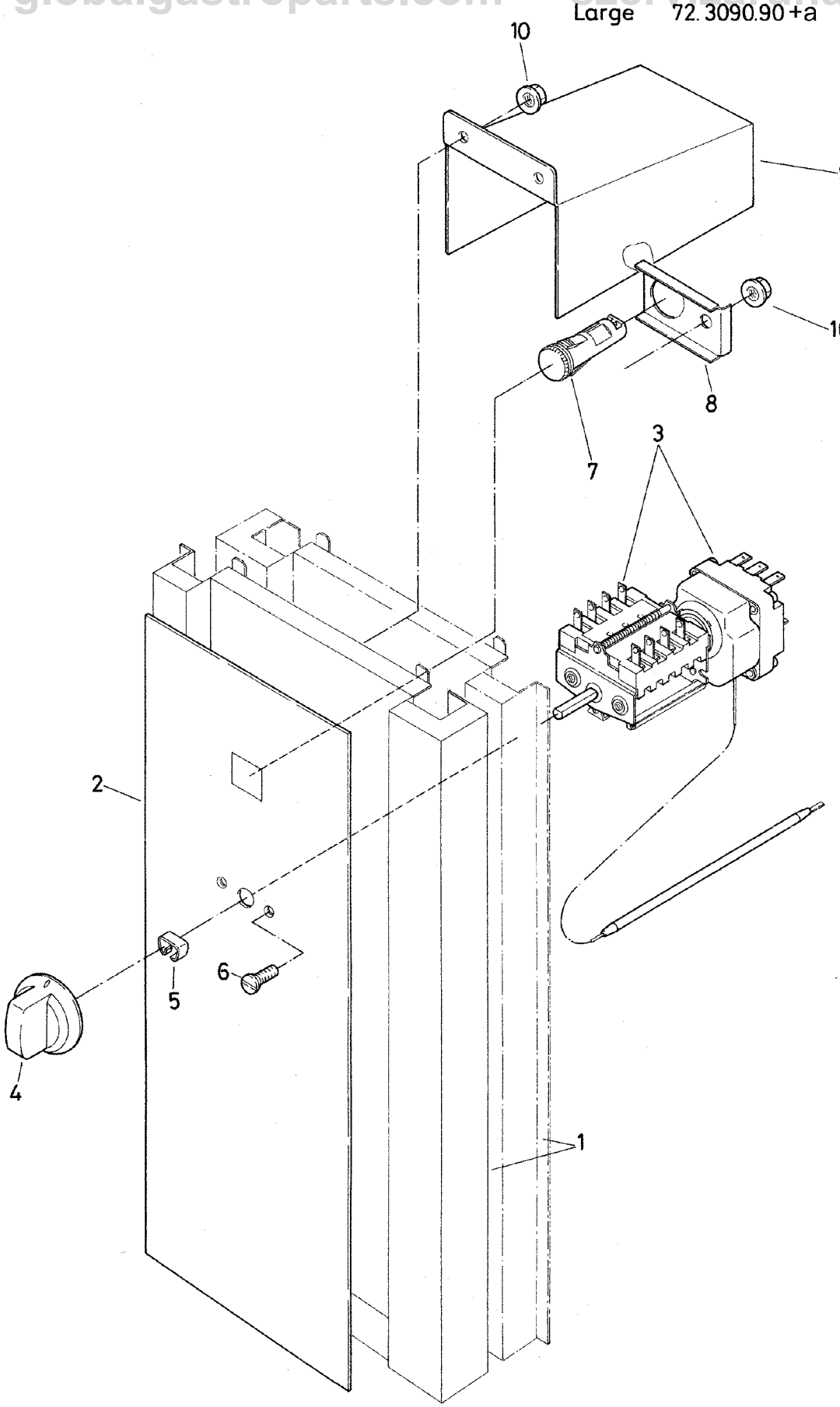

globalgastroparts.com - szervizaruhaz.hu

			unità	unit			Large 72.3090.90			
			pannello di comando	control panel					1	
			armadio riscalldante	hot cupboard					17.12.96	
Pos.	Produkt Nr.	Service Nr.	designatione	designation		159	249	259	359	Introd.
1	72.3026		pannello di comando 131 destra	control panel 131 right		1				
	72.3027		pannello di comando 131 sinistra	control panel 131 left		1				
	72.2576		pannello di comando 171 destra	control panel 171 right			1	1(*)		(*) 09/97
	72.2577		pannello di comando 171 sinistra	control panel 171 left			1	1(*)		(*) 09/97
	72.2716		pannello di comando 171 destra	control panel 171 right				1	1	
	72.2717		pannello di comando 171 sinistra	control panel 171 lef				1	1	
2	75.6506		lamiera	foil		1				
	72.6366		lamiera	foil	Electrolux	1				09.00
	75.6504		lamiera	foil			1	1	1	
	72.6364		lamiera	foil	Electrolux		1	1	1	09.00
3	712 844 006	1801 5427	regolatore con interruttore aggiunto	regulator with series switch		1	1	1	1	
4	72.2256.01	1900 6070	manetta	knob		1	1	1	1	
5	712 344 728	1901 6029	molla	spring		1	1	1	1	
6	1701 1006		vite	screw	M4x8	2	2	2	2	
7	1201 1863.01		lampada d'esercizio	operation lamp	200/230V	1	1	1	1	
	1201 1863.02		lampada d'esercizio	operation lamp	400/415/440V	1	1	1	1	
8	72.2439		sostegno di lampada	lamp support		1	1	1	1	
9	72.3127		copertura	cover		1	1	1	1	
10	712 044 120.05	1101 8576	dado	captire nut		3	3	3	3	

globalgastroparts.com - szervizaruhaz.hu

Doc. No.	Issue	IT	GB	Seite/ Page/ Pagina/ Page
72.3780.90a 72.3090.90a	08/2000	Unità	Unit	1
COMPACT LARGE		pannello di comando armadio riscaldante igienico	control panel hot cupboard hygienic	

Pos.	Product No.	Service No.	Designatione	Designation	Type	158 159	248 249	258 259	Introduc- tion
1	72.6226		pannello di comando destra	control panel right	100	1			08/2000
	72.6228		pannello di comando sinistra	control panel left	100	1			08/2000
	72.6231		pannello di comando destra	control panel right	200		1		08/2000
	72.6232		pannello di comando sinistra	control panel left	200		1		08/2000
	72.6222		pannello di comando destra	control panel right	170			1	08/2000
	72.6224		pannello di comando sinistra	control panel left	170			1	08/2000
2	75.6521		lamina	foil		1			08/2000
	72.6373		lamina	foil	Electrolux	1			09/2000
	75.6504		lamina	foil			1	1	08/2000
	72.6364		lamina	foil	Electrolux		1	1	09.2000
3	712 344 039		interruttore	switch		1			08/2000
	712 844 006	1801 5427	interruttore	switch			1	1	08/2000
4	72.2256.01		manetta	knob		1	1	1	08/2000
5	712 344 728	1901 6029	molla	spring		1	1	1	08/2000
6	1701 1006		per armadio	screw	M4x8	2	2	2	08/2000
7	72.4574.01		lampada d'esercizio	operating lamp	200/230V	1	1	1	08/2000
	72.4574.02		lampada d'esercizio	operating lamp	400/415V	1	1	1	08/2000
8	72.2439		sostegno	support		1	1	1	08/2000
9	72.3503		copertura	cover		1			08/2000
	72.3127		copertura	cover			1	1	08/2000
10	712 044 120.05	1101 8576	dado	nut	M5	3	3		08/2000

globalgastroparts.com - szervizaruhaz.hu

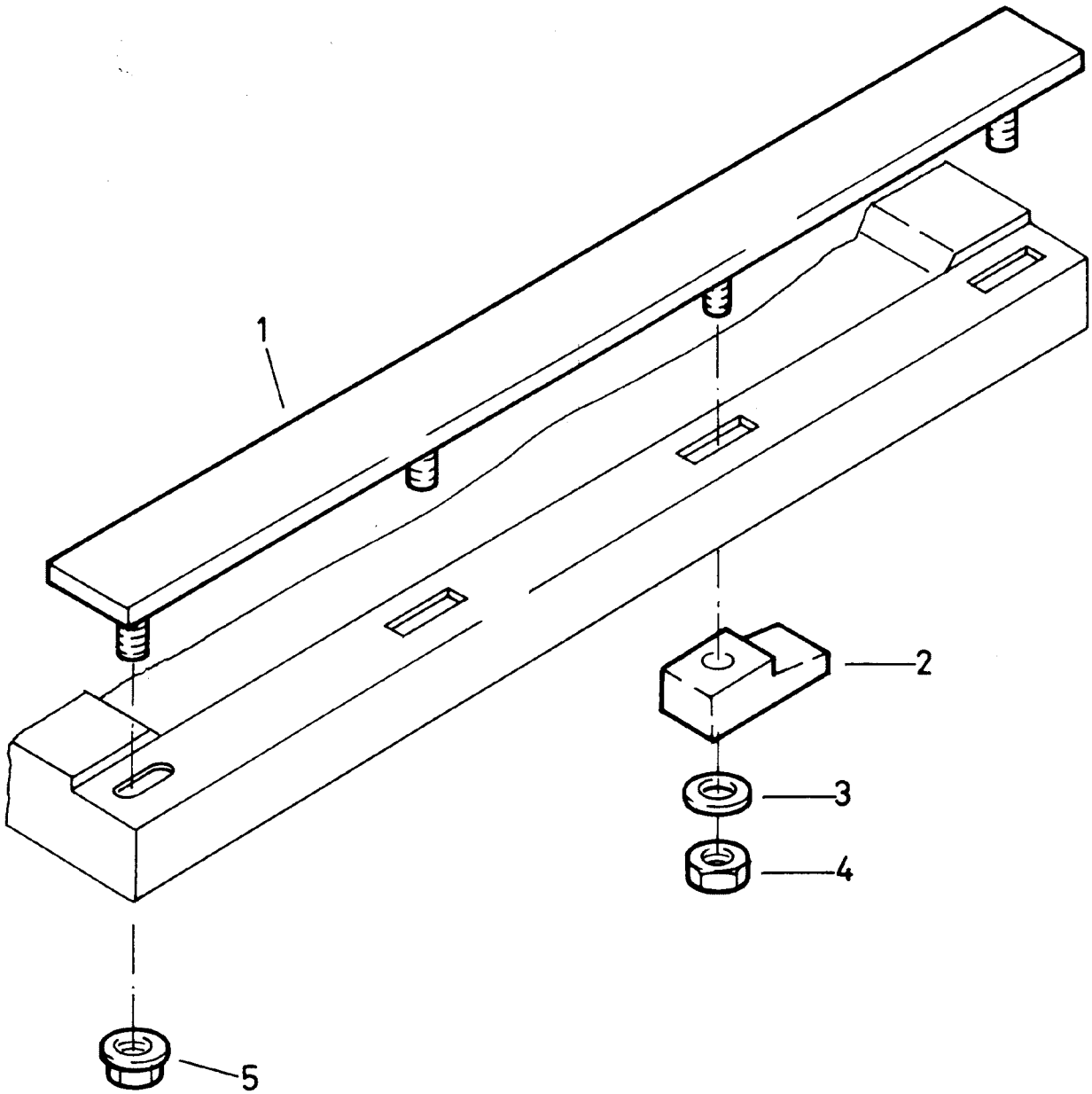

globalgastroparts.com - szervizaruhaz.hu

Doc. No.	Index	Issue	IT	GB	Seite/ Page/ Pagina/ Page
72.3090.92	1	04.95	Unità	Unit	1
			asta coniungimento	intermediate rail	

Pos.	Product No.	Service No.	Designatione	Designation	Type				Introduc-tion
1-5	705 820 311		asta finale	end rail	800		1		06/82
	705 820 264		asta finale	end rail	900		1		06/82
	71.0575		asta finale	end rail	1000		1		06/82
	705 820 312		asta di congiungimento	intermediate rail	800		1		06/82
	705 820 265		asta di congiungimento	intermediate rail	900		1		06/82
	76.2142.01		asta di congiungimento con foro lunghezza destra 1000 lunghezza sinistra 900	intermediate rail with cutout length right 1000 length left 900	1000		1		08.98
	76.2142.02		asta di congiungimento con foro lunghezza destra 900 lunghezza sinistra 1000	intermediate rail with cutout length right 900 length left 1000	1000		1		08.98
	76.2143.01		asta di congiungimento senza foro apparecchio: lunghezza destra 1000 lunghezza sinistra 900	intermediate rail without cutout appliance: length right 1000 length left 900	1000		1		08.98
	76.2143.02		asta di congiungimento senza foro apparecchio: lunghezza destra 900 lunghezza sinistra 1000	intermediate rail without cutout appliance: length right 900 length left 1000	1000		1		08.98
2	705 040 074		cuneo	wedge			3/6		06/82
3	1701 5047		anello di molla	spring ring	M6		3/6		06/82
4	1701 3016	1101 8572	dado	nut	M6/0.8d		3/6		06/82
5	712 044 120.06	1101 8577	dado	nut	M6		3/6		06/82

globalgastroparts.com - szervizaruhaz.hu

Compact 72.3780.94
Large 72.3090.94

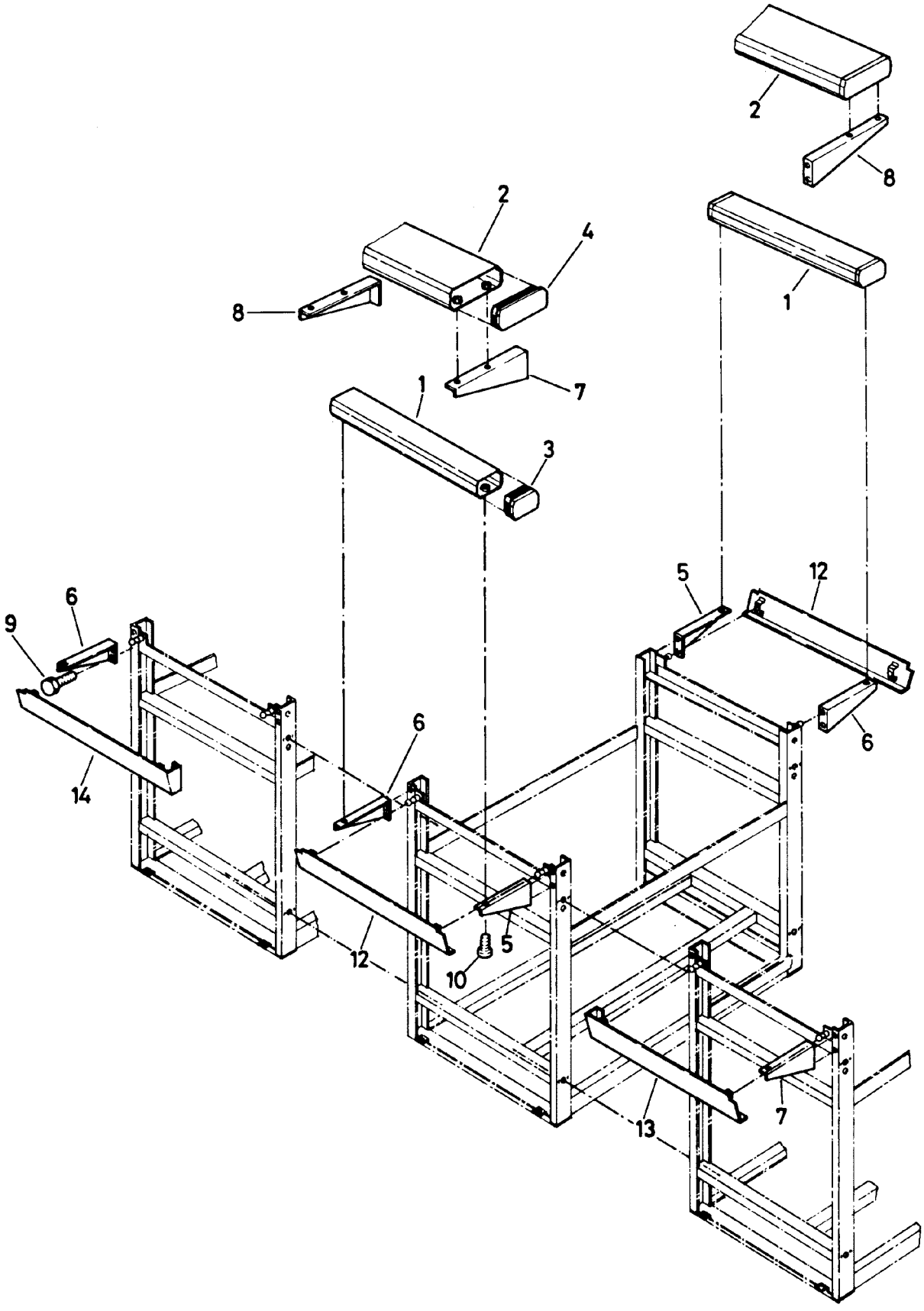

globalgastroparts.com - szervizaruhaz.hu

			unità	unit	Large 72.3090.94 Compact 72.3780.94
			corrimano	range rail	1
			copertura superiore	filler upper	10.4.1995

Pos.	Produkt Nr.	Service Nr.	designation	designation	
1	72.2200.04		corrimano stretto	thin range rail	400 mm
	72.2200.05		corrimano stretto	thin range rail	500 mm
	72.2200.06		corrimano stretto	thin range rail	600 mm
	72.2200.07		corrimano stretto	thin range rail	700 mm
	72.2200.08		corrimano stretto	thin range rail	800 mm
	72.2200.09		corrimano stretto	thin range rail	900 mm
	72.2200.10		corrimano stretto	thin range rail	1000 mm
	72.2200.11		corrimano stretto	thin range rail	1100 mm
	72.2200.12		corrimano stretto	thin range rail	1200 mm
	72.2200.13		corrimano stretto	thin range rail	1300 mm
	72.2200.14		corrimano stretto	thin range rail	1400 mm
	72.2200.15		corrimano stretto	thin range rail	1500 mm
	72.2200.16		corrimano stretto	thin range rail	1600 mm
	72.2200.17		corrimano stretto	thin range rail	1700 mm
	72.2200.18		corrimano stretto	thin range rail	1800 mm
	72.2200.19		corrimano stretto	thin range rail	1900 mm
	72.2200.20		corrimano stretto	thin range rail	2000 mm
	72.2200.21		corrimano stretto	thin range rail	2100 mm
	72.2200.22		corrimano stretto	thin range rail	2200 mm
	72.2200.23		corrimano stretto	thin range rail	2300 mm
	72.2200.24		corrimano stretto	thin range rail	2400 mm
	72.2200.25		corrimano stretto	thin range rail	2500 mm
2	72.2076.04		corrimano largo	large range rail	400 mm
	72.2076.05		corrimano largo	large range rail	500 mm
	72.2076.06		corrimano largo	large range rail	600 mm
	72.2076.07		corrimano largo	large range rail	700 mm
	72.2076.08		corrimano largo	large range rail	800 mm
	72.2076.09		corrimano largo	large range rail	900 mm
	72.2076.10		corrimano largo	large range rail	1000 mm
	72.2076.11		corrimano largo	large range rail	1100 mm
	72.2076.12		corrimano largo	large range rail	1200 mm
	72.2076.13		corrimano largo	large range rail e	1300 mm
	72.2076.14		corrimano largo	large range rail	1400 mm
	72.2076.15		corrimano largo	large range rail	1500 mm
	72.2076.16		corrimano largo	large range rail	1600 mm
	72.2076.17		corrimano largo	large range rail	1700 mm

globalgastroparts.com - szervizaruhaz.hu

			unità	unit		Large 72.3090.94 Compact 72.3780.94
			corrimano	range rail		2
			copertura superiore	filler upper		10.4.1995
Pos.	Produkt Nr.	Service Nr.	designation	designation		Introd.
2	72.2076.18		corrimano largo	large range rail	1800 mm	
	72.2076.19		corrimano largo	large range rail	1900 mm	
	72.2076.20		corrimano largo	large range rail	2000 mm	
	72.2076.21		corrimano largo	large range rail	2100 mm	
	72.2076.22		corrimano largo	large range rail	2200 mm	
	72.2076.23		corrimano largo	large range rail	2300 mm	
	72.2076.24		corrimano largo	large range rail	2400 mm	
	72.2076.25		corrimano largo	large range rail	2500 mm	
	72.2076.26		corrimano largo	large range rail	2600 mm	
	72.2076.27		corrimano largo	large range rail	2700 mm	
3	72.2077	1900 6087	pezzo finale	end part		
4	72.2075	1900 6088	pezzo finale	end part		
5	72.2072	R/HS	mensola	console		
6	72.2073	L/HS	mensola	console		
7	72.2201	R/HB	mensola	console		
	72.6802.01	R/HB	mensola marine	marine console		05/01
8	72.2202	L/HB	mensola	console acket		
	72.6802.02	L/HB	mensola marine	marine console		05/01
9	1701 2600		vite	screw	M6x12	
10	1701 2509		vite	screw	M5x12	

	spiegazione	**explanation**
R	destra	right
L	sinistra	left
HB	corrimano largo	large range rail
HS	corrimano stretto	rod thin

globalgastroparts.com - szervizaruhaz

			unità	unit	Large 72.3090.94 Compact 72.3780.94
			corrimano	rod	3
			copertura superiore	filler upper	10.4.1995
Pos.	Produkt Nr.	Service Nr.	designation	designation	
12	72.3149		copertura superiore kpl. 200 con mensola	filler upper kpl. 200 with bracket	
	72.2481		copertura superiore kpl. 400 con mensola	filler upper kpl. 400 with bracket	
	72.2482		copertura superiore kpl. 500 con mensola	filler upper kpl. 500 with bracket	
	72.2483		copertura superiore kpl. 800 con mensola	filler upper kpl. 800 with bracket	
	72.2484		copertura superiore kpl. 1000 con mensola	filler upper kpl. 1000 with bracket	
	72.2485		copertura superiore kpl. 1500 con mensola	filler upper kpl. 1500 with bracket	
13	72.3151		copertura superiore kpl. 200 mensola dest.	filler upper kpl. 200 bracket right	
	72.2476		copertura superiore kpl. 400 mensola dest.	filler upper kpl. 400 bracket right	
	72.2477		copertura superiore kpl. 500 mensola dest.	filler upper kpl. 500 bracket right	
	72.2478		copertura superiore kpl. 800 mensola dest.	filler upper kpl. 800 bracket right	
	72.2479		copertura superiore kpl. 1000 mensola des.	filler upper kpl. 1000 bracket right	
	72.2480		copertura superiore kpl. 1500 mensola des.	filler upper kpl. 1500 bracket right	
14	72.3153		copertura superiore kpl. 200 mensola sin.	filler upper kpl. 200 bracket left	
	72.2471		copertura superiore kpl. 400 mensola sin.	filler upper kpl. 400 bracket left	
	72.2472		copertura superiore kpl. 500 mensola sin.	filler upper kpl. 500 bracket left	
	72.2473		copertura superiore kpl. 800 mensola sin.	filler upper kpl. 800 bracket left	
	72.2474		copertura superiore kpl. 1000 mensola sin.	filler upper kpl. 1000 bracket left	

globalgastroparts.com szervizarubaz.hu

HERDE / FOURNEAUX / CUCINE / RANGES		ENDTISCH / TABLE ATTENANTE / TAVOLO LATERALE / END-SPREADER	
Herdstange / tablette / corrimano / range rail			
schmal / étroit / stretto / thin	breit / large / largo / large	schmal / étroit / stretto / thin	breit / large / largo / large
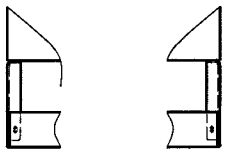 72.2073 72.2072	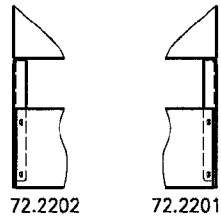 72.2202 72.2201	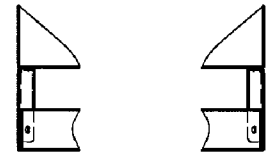 72.3438 72.3440	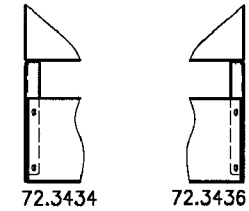 72.3434 72.3436

HERDE / FOURNEAUX / CUCINE / RANGES Mitte / médian / mezzo / middle		ZWISCHENTISCH / TABLE INTERMÉDIAIRE / TAVOLO INTERMEDIO / CENTRE-SPREADER Mitte / médian / mezzo / middle	
Herdstange / tablette / corrimano / range rail			
schmal / étroit / stretto / thin	breit / large / largo / large	schmal / étroit / stretto / thin	breit / large / largo / large
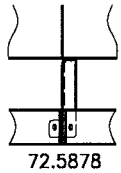 72.5878	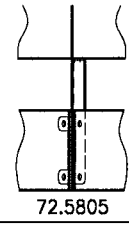 72.5805	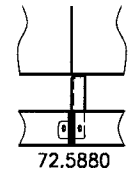 72.5880	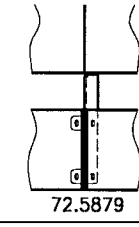 72.5879

HERDE / FOURNEAUX / CUCINE / RANGES ZWISCHENTISCH / TABLE INTERMÉDIAIRE / TAVOLO INTERMEDIO / CENTRE-SPREADER ENDTISCH / TABLE ATTENANTE / TAVOLO LATERALE / END-SPREADER Mitte / médian / mezzo / middle	
Herdstange / tablette / corrimano / range rail	
schmal / étroit / stretto / thin	breit / large / largo / large
72.5878 72.5880	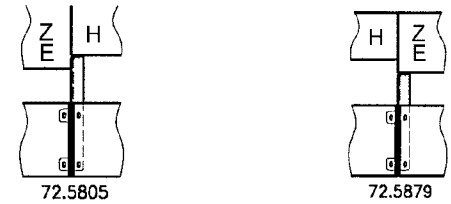 72.5805 72.5879

ECKKONSOLE FÜR FRONT- UND SEITENSTANGEN / CONSOLE ANGLE POUR TABLETTES AVANT ET LATÉRAL / MENSOLA ANGOLO PER CORRIAMI DAVANTI E LATERALE / CORNER CONSOLE FOR FRONT AND SIDE RANGE RAIL		
schmal + schmal / étroit + étroit / stretto + stretto / thin + thin	breit + breit / large + large / largo + largo / large + large	breit + schmal / large + étroit / largo + stretto / large + thin
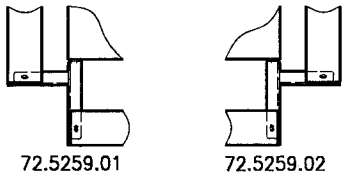 72.5259.01 72.5259.02	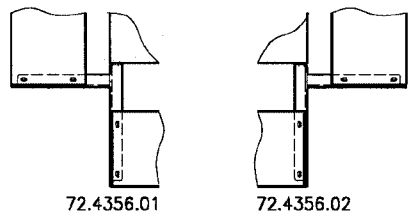 72.4356.01 72.4356.02	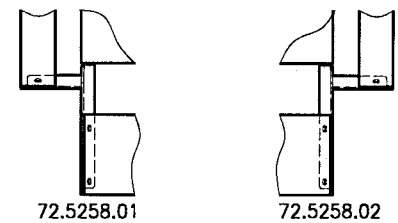 72.5258.01 72.5258.02

ECKKONSOLE FÜR SEITENHERDSTANGE / CONSOLE ANGLE POUR TABLETTE LATÉRAL / MENSOLA ANGOLO PER CORRIAMO LATERALE / CORNER CONSOLE FOR SIDE RANGE RAIL	
schmal / étroit / stretto / thin	breit / large / largo / large
72.5833.01 72.5833.02	72.5935.01 72.5935.02

	Erklärung	explication	spiegazione	explanation
H	Herd	fourneau	cucina	range
Z	Zwischentisch	table intermédiaire	tavolo intermedio	centre-spreader
E	Endtisch	table attenante	tavolo laterale	end-spreader

globalgastroparts.com - szervizalkatreszek

MARINE

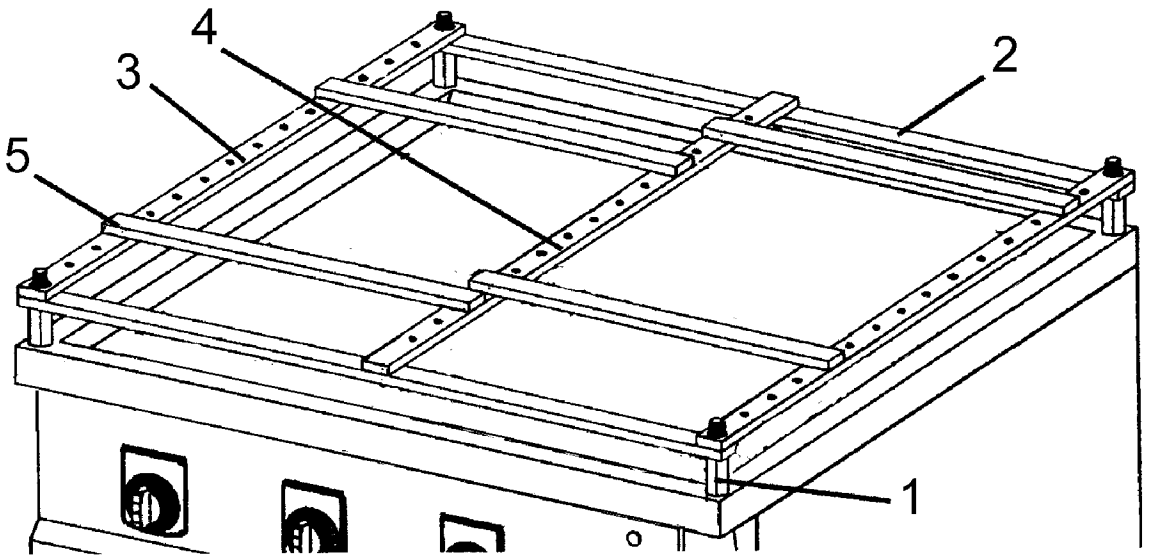

globalgastroparts.com - szervizaruhaz.hu

MARINE			unità asta antirollio	unit rolling rack	Compact 72.3780.95				Large 72.3090.95		1 05.00
Pos.	Produkt Nr.	Service Nr.	designation	designation	148	158	159	248	259	349	359
	72.4288		unita completo	complete set	1						
	72.5306		unita completo	complete set		1					
	72.4595		unita completo	complete set			1				
	72.3996		unita completo	complete set				1			
	705 820 304		unita completo	complete set					1		
	705 820 307		unita completo	complete set						1	
	705 820 305		unita completo	complete set							1
1	705 040 432		bullone	bolt	4	4	4	4	4	4	4
2	72.4286		asta	rod	2						
	72.4593		asta	rod		2					
	72.4593		asta	rod			2				
	705 030 490		asta	rod				2			
	705 030 474		asta	rod					2		
	705 030 492		asta	rod						2	
	705 030 478		asta	rod							2
3	72.3994		asta	rod	2	2		2			
	705 030 475		asta	rod			2		2	2	2
4	72.3995		asta	rod				1			
	705 030 476		asta	rod					1	2	2
5	72.4287		asta	rod	2						
	72.4594		asta	rod		2	2				
	705 030 491		asta	rod				4			
	705 030 477		asta	rod					4		
	705 030 493		asta	rod						6	
	705 030 479		asta	rod							6

globalgastroparts.com - szervizkatalogus

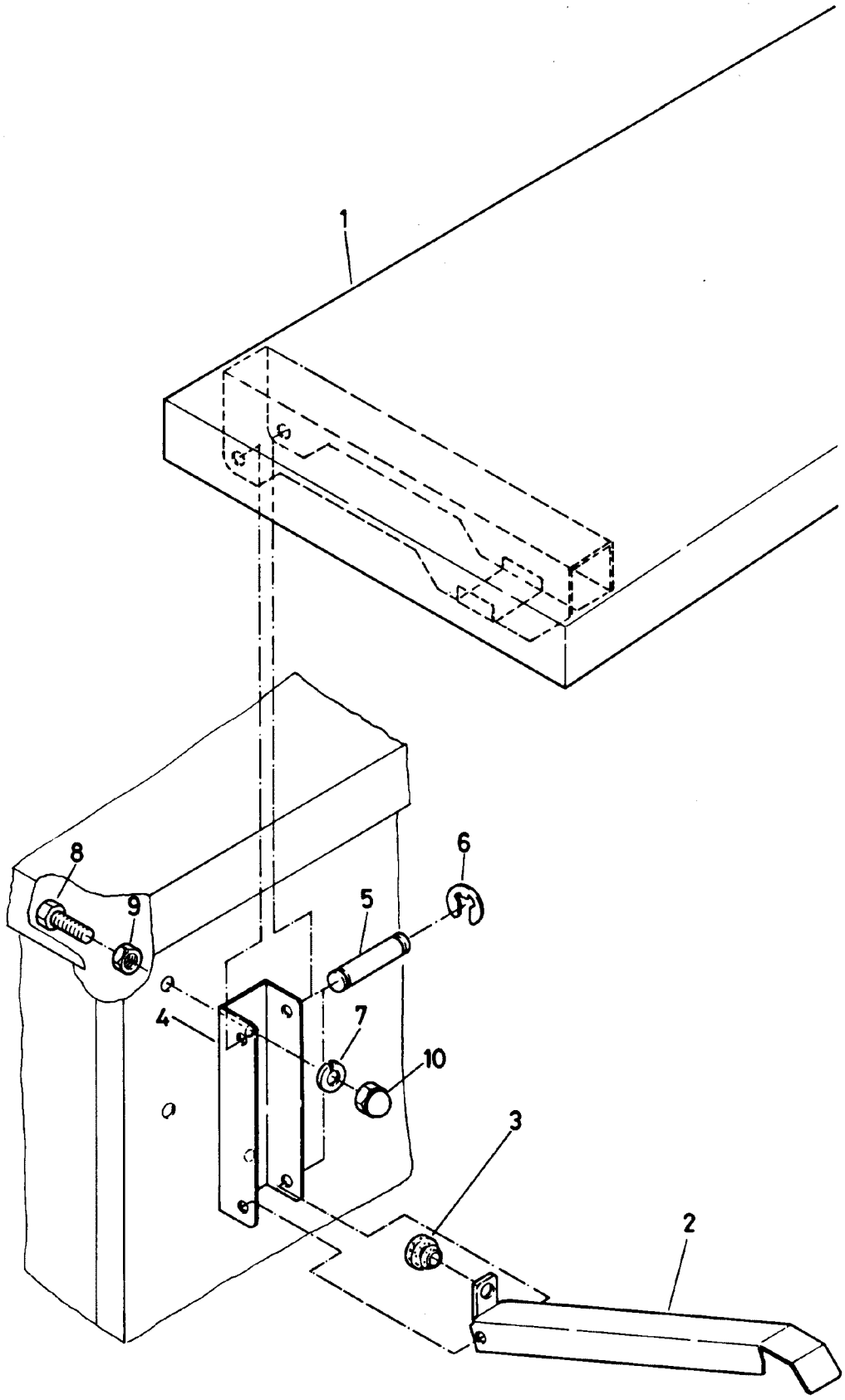

globalgastroparts.com - szervizaruhaz.hu

			unità ripiano ribaltabile	unit lift up shelf		Large 72.3090.96 1/1 10.4.1995
Pos.	Produkt Nr.	Service Nr.	designation	designation		
1	72.2301		tavola, ripiano	shelf	300x900	1
	72.2302		tavola, ripiano	shelf	400x900	1
2	705 030283		sostegno	stud		2
3	712 044960.02		tampone di gomma	rubber bumper		2
4	72.2300		placca	plate		2
5	75.9000		asse	shaft		4
6	75.9001.06		fusibile	fuse		8
7	1 701 5007		disco a molla	spring disk		4
8	1 701 2602		vite	screw		4
9	1 701 3016		dado	nut	M6	4
10	1 701 3053		dado	hat nut	M6	4

globalgastroparts.com - szervizaruhaz.hu

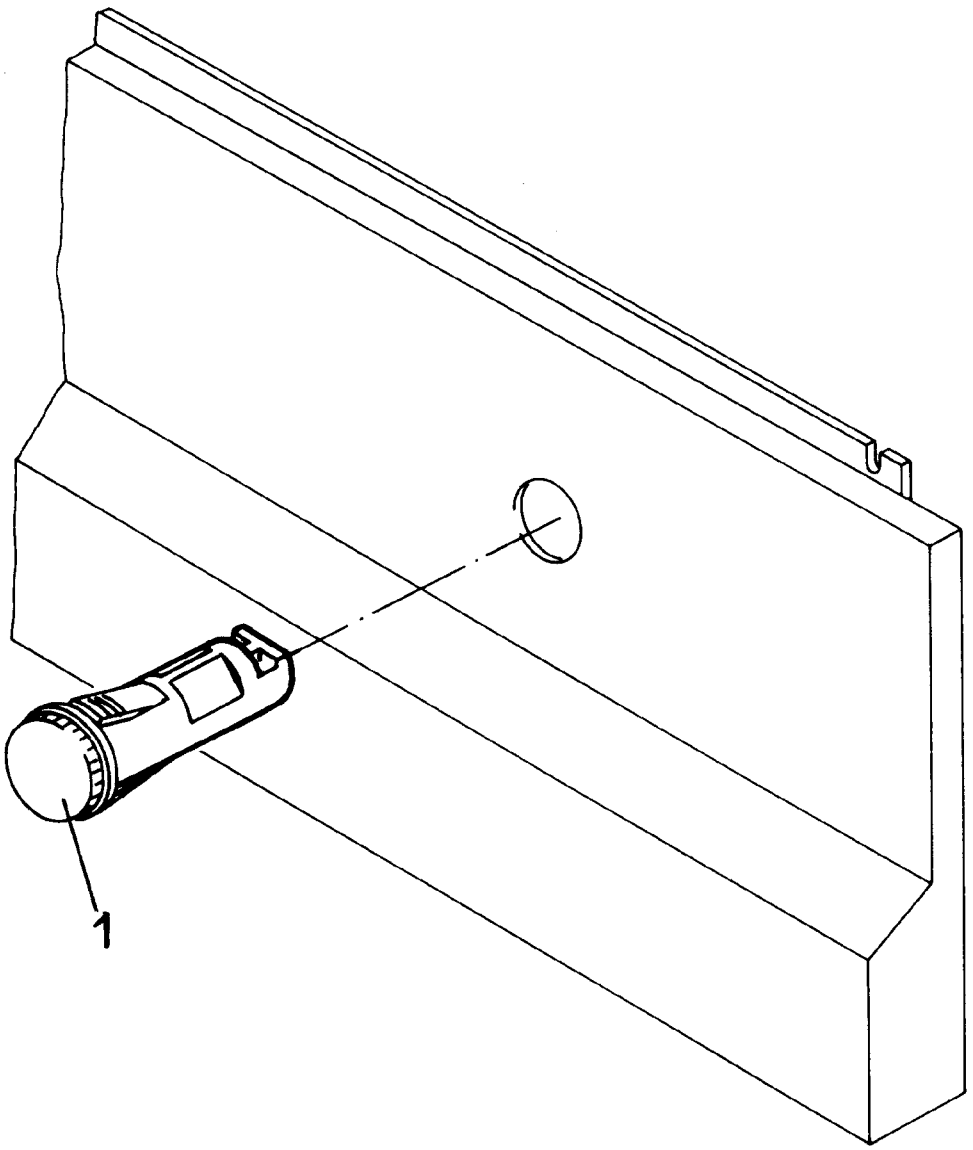

globalgastroparts.com - szervizaruhaz.hu

			unità lampada	unit lamp	Large/Compact 72.3090.97/72.3780.97 1/1 19.2.1996	
Pos.	Produkt Nr.	Service Nr.	designation	designation		Introd.
1	1201 1863.01	1800 2877	lampada verde	lamp green	200/230V	
	1201 1863.02	1800 2876	lampada verde	lamp green	400/415/440V	
	1201 1865.01		lampada bianca	lamp white	200/230V	
	1201 1865.02		lampada bianca	lamp white	400/415/440V	
	1201 1867		lampada rossa	lamp red	230V	
			MARINE			
1	1201 1894		lampada verde	lamp green	400 - 440V	
	1201 1895		lampada bianca	lamp white	400 - 440V	
	1201 1905		lampada verde	lamp green	200/230V	
	1201 1906		lampada bianca	lamp white	200/230V	

			unità lampada	unit lamp	Large/Compact 72.3090.97/72.3780.97 1/1 12.9.1996	
Pos.	Produkt Nr.	Service Nr.	designation	designation		Introd.
1	72.4574.01	1800 2877	lampada verde	lamp green	200/230V	
	72.4574.02	1800 2876	lampada verde	lamp green	400/415/440V	
	72.4574.05		lampada bianca	lamp white	200/230V	
	72.4574.06		lampada bianca	lamp white	400/415/440V	
	72.4574.09		lampada rossa	lamp red	230V	
	72.5938.01		lampada verde	lamp green	12V ALCE	
			MARINE			
1	72.4574.03		lampada verde	lamp green	400 - 440V	
	72.4574.07	1800 2874	lampada bianca	lamp white	400 - 440V	
	72.4574.04		lampada verde	lamp green	200/230V	
	72.4574.08		lampada bianca	lamp white	200/230V	

globalgastroparts.com - szervizaruhaz.hu

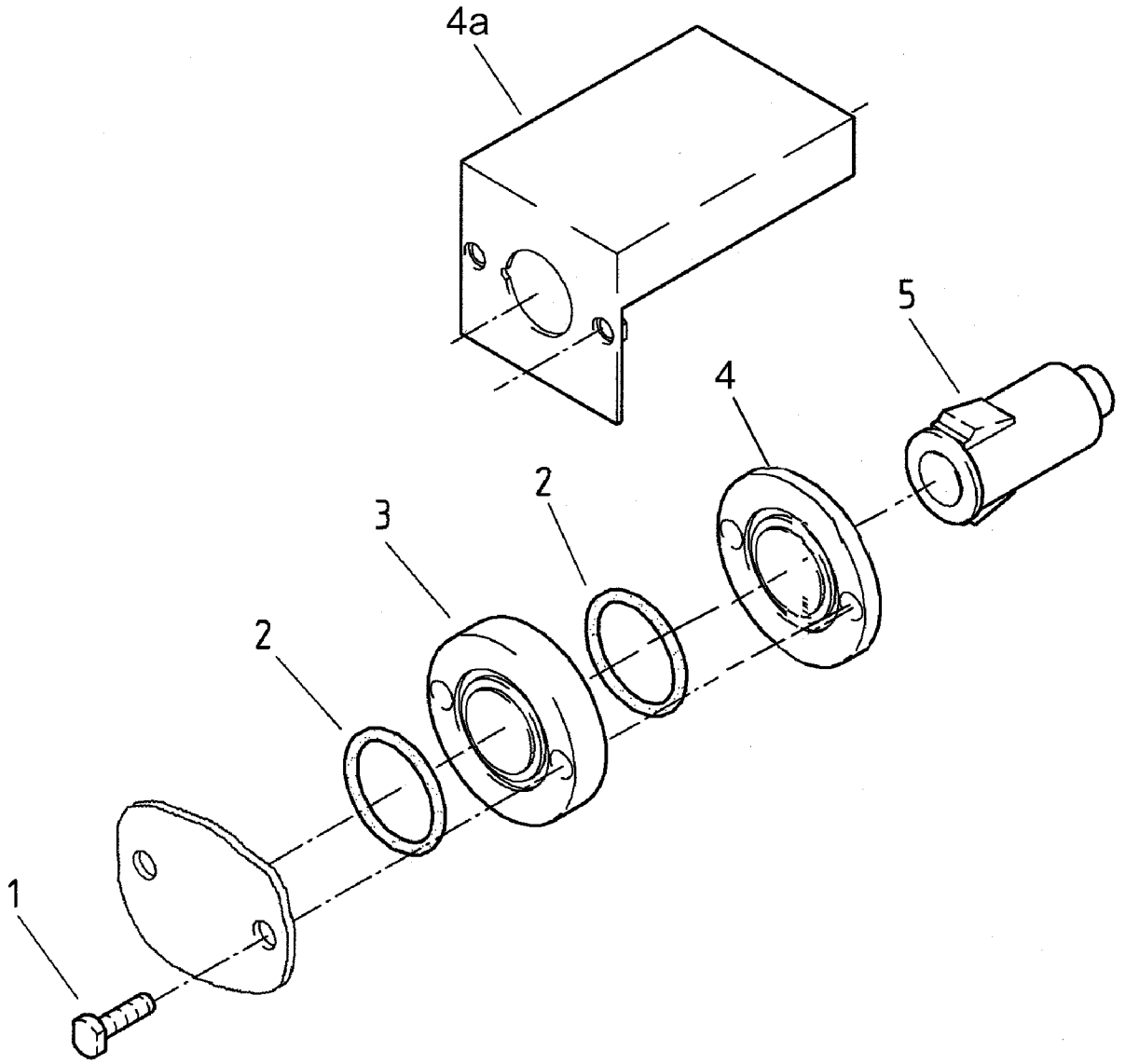

globalgastroparts.com - szervizaruhaz.hu

			unità lampada	unit lamp		Large 72.3090.97a 1 04.98
Pos.	Produkt Nr.	Service Nr.	designation	designation		
1 – 5	72.5604.01		lampada verde completo	lamp green complete	400/440V	1
	72.5604.03		lampada bianca completo	lamp white complete	400/440V	1
1	75.5006.01		vite	screw	M5x20	2
2	1201 2003		anello	o-ring		2
3	72.5456		calotta	calotte		1
4	72.6393		lamiera di sostegno	support sheet		1
4a	72.5460.01		cappa di protezione installazione in sito	protection hood on site installation		1
	72.5460.02		cappa di protezione normale	protection hood normal		1
5	72.5464.01		lampada verde	lamp green	400/440V	1
	72.5464.03		lampada bianca	lamp white	400/440V	1
1115 1282			tubo isolante	insulation hose		2

globalgastroparts.com - szervizaruhaz.hu

72.3090.98
07.00

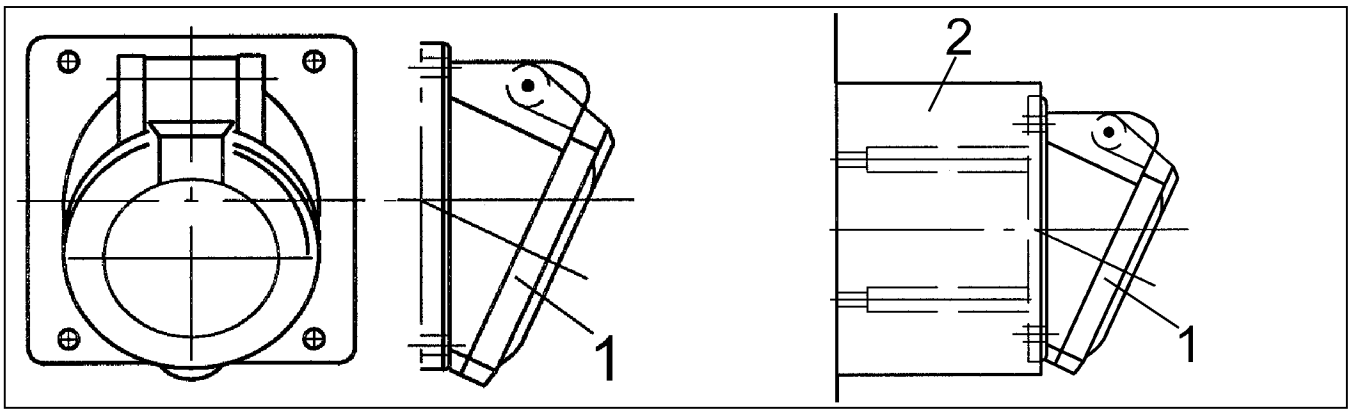

Doc. No.		Issue	IT	GB	Seite/ Page/ Pagina/ Page
72.3090.98		**07/00**	**Unità**	**Unit**	**1**
			presa di corrente	**socket**	

Pos.	Product No.	Service No.	Designatione	Designation	Type	Introduction
1	1115 1443		presa di corrente EURO	socket EURO	16A/3N/400V	07/00
	1115 1444		presa di corrente EURO	socket EURO	32A/3N/400V	07/00
	1115 1579		presa di corrente CH	socket CH	16A/1N/230V	07/00
	1115 1578		presa di corrente CH	socket CH	16A/3N/400V	07/00
2	1115 1445		base EURO	housing EURO		07/00

globalgastroparts.com - szervizaruhaz.hu

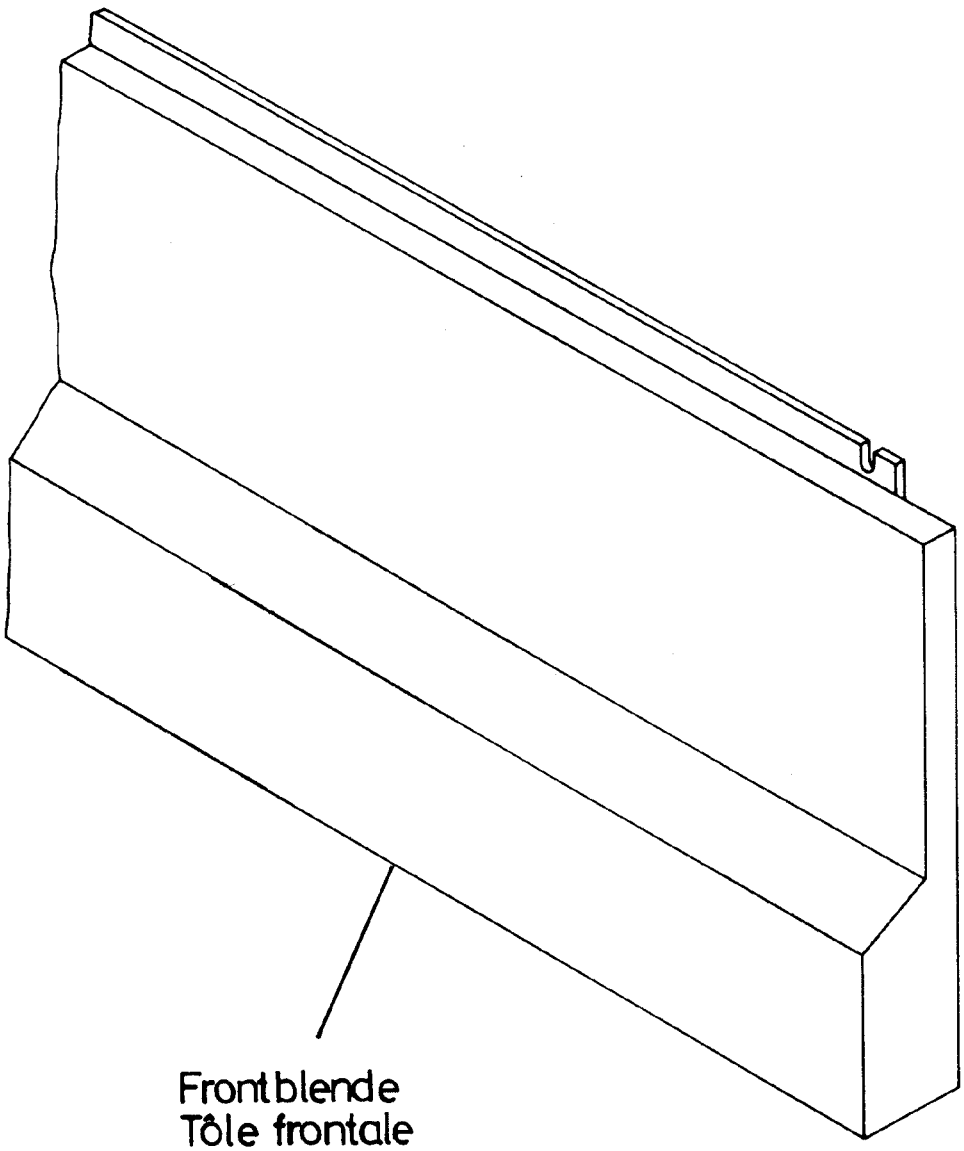

Frontblende
Tôle frontale
Lamiera frontale
front panet

globalgastroparts.com - szervizaruhaz.hu

Baugruppe	unité	unità	unit	Large and Compact 72.3090.99/72.3780.99
Frontblende	tôle frontale	lamiera frontale	front panel	1/19
Oberbau	partie supérieure	parte superiore	upper part	1.3.1996

WIDTH 500 mm, with CUPBOARD or without LOWER PART

Product No.	Service No.	Electric switches	Lamps	Lamps small	Gas switches	Piezo buttons	Valve	Introd.
72.2079.02		1 centre						
72.2079.03		1 centre	1 right					
72.2079.04		2 symmetric						
72.2079.05		2 symmetric	1 centre					
72.2079.06		2 symmetric	2 symmetric					
72.2079.07		3 symmetric						
72.2079.08		1 centre		1 right				10/01
72.2079.09		2 symmetric		2 symmetric				10/01
72.2079.20					1 left			
72.2079.21					2 symmetric			
72.2079.22					1 left	1 left		
72.2079.23					2 symmetric	2 symmetric		
72.2079.24					2 symmetric	1 right		
72.2079.25					2 symmetric	1 left		
72.2079.26		2 symmetric			2 symmetric	2 symmetric		

globalgastroparts.com - szervizaruhaz.hu

Baugruppe	unité	unità	unit	Large and Compact 72.3090.99/72.3780.99
Frontblende	tôle frontale	lamiera frontale	front panel	2/19
Oberbau	partie supérieure	parte superiore	upper part	1.3.1996

WIDTH 800 mm, with CUPBOARD or without LOWER PART

Product No.	Service No.	Electric switches	Lamps	Lamps small	Gas switches	Piezo buttons	Remarks	Introd.
72.2387.02		1 centre	1 right					
72.2387.03		2 symmetric						
72.2387.04		2 symmetric	1 centre					
72.2387.05		4 symmetric						
72.2387.06		4 symmetric	1 right					
72.2387.07		2 left						
72.2387.08		4 symmetric	4 symmetric					
72.2387.09		2 right						
72.2387.10		1 centre						
72.2387.11		2 symmetric	2 symmetric					
72.2387.12		2 right	2 right					
72.2387.13		2 symmetric		2 symmetric				10/01
72.2387.14		4 symmetric		4 symmetric				10/01
72.2387.20					4 symmetric			
72.2387.21					1 left, 1 right	1 right		
72.2387.22					1 left, 1 right	1 left		
72.2387.23					4 symmetric	2 right		
72.2387.24					1 left, 1 right			
72.2387.25					4 symmetric	2 right, 1 left		
72.2387.26					4 symmetric	1 right, 1 left		
72.2387.27					1 left, 1 right	1 left, 1 right		
72.2387.28					4 symmetric	2 left		
72.2387.29					4 symmetric	4 symmetric		
72.2387.30					1 left			
72.2387.31					1 right			
72.2387.32					2 left			
72.2387.33					4 symmetric	1 right		
72.2387.34					2 right			
72.2387.40		1 left			1 right			
72.2387.41		1 right			1 left			
72.2387.42		2 right			2 left			
72.2387.43		1 left	1 left		1 right			
72.2387.44		2 left			2 right			

globalgastroparts.com - szervizaruhaz.hu

Baugruppe	unité	unità	unit	Large and Compact 72.3090.99/72.3780.99
Frontblende	tôle frontale	lamiera frontale	front panel	3/19
Oberbau	partie supérieure	parte superiore	upper part	1.3.1996

WIDTH 1000 mm, with CUPBOARD or without LOWER PART

Product No.	Service No.	Electric switches	Lamps	Lamps small	Gas switches	Piezo buttons	Remarks	Introduction
72.2389.02		1 right	1 right					
72.2389.03		2 symmetric						
72.2389.04		1 left, 1 right	1 left, 1 right					
72.2389.05		4 symmetric						
72.2389.06		2 symmetric	1 left					
72.2389.07		4 symmetric	1 left					
72.2389.08		1 left	1 left					
72.2389.09		4 symmetric	4 symmetric					
72.2389.10		2 symmetric	1 right					
72.2389.11		1 right						
72.2389.12		4 symmetric	2 right, 1 left					
72.2389.13		1 left						
72.2389.14		2 left, 1 right	1 right					
72.2389.15		2 right, 1 left	1 left					
72.2389.16		1 left, 2 right	2 right					
72.2389.17		2 left						
72.2389.18		2 left	2 left					
72.2389.19		4 symmetric	2 right					
72.2389.60		2 left, 1 right	2 left, 1 right					
72.2389.61		4 symmetric	1 right					
72.2389.62		1 left, 2 right	1 left, 2 right					
72.2389.63		1 left, 2 right			1 left, 1 right			
72.2389.64		4 symmetric	2 left					
72.2389.20					4 symmetric			
72.2389.21					1 left, 1 right			
72.2389.22					1 right			
72.2389.23					4 symmetric	2 right		
72.2389.24					4 symmetric	1 left		
72.2389.25					4 symmetric	2 left		
72.2389.26					1 left, 1 right	1 right		
72.2389.27					1 left, 1 right	1 left		
72.2389.28					4 symmetric	4 symmetric		
72.2389.29					1 left, 1 right	1 right		
72.2389.30					1 left			
72.2389.31					4 symmetric	1 left, 1 right		
72.2389.32					1 right	1 right		
72.2389.33					2 right			12/01
72.2389.34					2 left			12/01

globalgastroparts.com - szervizaruhaz.hu

WIDTH 1000 mm, with CUPBOARD or without LOWER PART

Product No.	Service No.	Electric switches	Lamps	Lamps small	Gas switches	Piezo buttons	Remarks	Introd.
72.2389.40		1 left			1 right			
72.2389.41		1 right			1 left			
72.2389.42		2 left	2 left		1 right			
72.2389.43					1 left			
72.2389.44		1 right	1 right		1 left			
72.2389.45		1 left	1 left		2 right			
72.2389.46		2 left			2 right			
72.2389.47		2 right			2 left			
72.2389.48		1 left	1 left		1 right			
72.2389.49		2 left			2 left, 2 right			
72.2389.50		2 right			2 left, 2 right			
72.2389.51		1 right	1 right		2 left			
72.2389.52		1 left	1 left		2 right	2 right		
72.2389.53		1 right	1 right		1 left	1 left		
72.6922.01		1 right		1 right				10/01
72.6922.02		1 left		1 left				10/01
72.6922.03		2 symmetric		2 symmetric				10/01
72.6922.04		2 right		2 right				10/01
72.6922.05		2 left		2 left				10/01
72.6922.06		1 left, 2 right		1 left, 2 right				10/01
72.6922.07		2 left, 1 right		2 left, 1 right				10/01
72.6922.08		4 symmetric		4 symmetric				10/01
72.6922.11		2 symmetric	1 left	1 right				10/01
72.6922.12		2 symmetric	1 right	1 left				10/01
72.6922.13		2 right, 1 left	1 left	2 right				10/01
72.6922.14		1 right, 2 left	1 right	1 left				10/01
72.6922.15		1 right, 2 left	2 left	1 right				10/01
72.6922.16		2 right, 1 left	2 right	1 left				10/01
72.6922.17		4 symmetric	2 left	2 right				10/01
72.6922.18		4 symmetric	2 right	2 left				10/01

globalgastroparts.com - szervizaruhaz.hu

Baugruppe	unité	unità	unit	Large and Compact 72.3090.99/72.3780.99
Frontblende	tôle frontale	lamiera frontale	front panel	5/19
Oberbau	partie supérieure	parte superiore	upper part	1.3.1996

WIDTH 1000 mm, with CUPBOARD or without LOWER PART

Product No.	Service No.	Electric switches	Lamps	Lamps small	Gas switches	Piezo buttons	Remarks	Introd.
72.6922.21		1 right		1 right	1 left			10/01
72.6922.22		1 left		1 left	1right			10/01
72.6922.23		2 right		2 right	1 left			10/01
72.6922.24		2 left		2 left	1right			10/01
72.6922.25		1 right		1 right	2 left			10/01
72.6922.26		1 left		1 left	2 right			10/01
72.6922.27		2 right		2 right	2 left			10/01
72.6922.28		2 left		2 left	2 right			10/01
72.6922.41		4 symmetric		2 right				10/01
72.6922.42		4 symmetric		2 left				10/01
72.6922.43		2 right, 1 left		2 right				10/01
72.6922.44		1 right, 2 left		2 left				10/01

globalgastroparts.com - szervizaruhaz.hu

WIDTH 1000 mm, FRONT SIDE, with BAKING OVEN (not valid for Marine)

Product No.	Service No.	Electric switches	Lamps	Lamps small	Gas switches	Piezo buttons	Remarks	Introduction
72.2078.02		1 right	1 right					
72.2078.03		2 symmetric						
72.2078.04		2 symmetric	2 symmetric					
72.2078.05		4 symmetric						
72.2078.06		2 symmetric	1 left					
72.2078.07		4 symmetric	1 left					
72.2078.08		2 symmetric	1 right					
72.2078.09		2 left, 1 right	2 left, 1 right					
72.2078.10		4 symmetric	2 right					
72.2078.11		4 symmetric	2 left					
72.2078.12		1 left	1 left					
72.2078.13		1 left, 2 right	2 right					
72.2078.14		4 symmetric	4 symmetric					
72.2078.15		1 left, 2 right	1 left					
72.2078.16		2 left, 1 right	1 right					
72.2078.17		2 left	2 left					
72.2078.18		2 left	1 left					
72.2078.19		1 left, 2 right	1 left, 2 right					
72.2078.80		2 left, 1 right	1 left, 1 right					
72.2078.81		2 left, 1 right	2 left					
72.2078.82		2 left						
72.2078.83		1 right						
72.2078.84		1 left						
72.2078.85		2 right	2 right					
72.2078.86		4 symmetric	1 left, 1 right					
72.2078.87		2 right						
72.2078.20					4 symmetric			
72.2078.21					1 left, 1 right			
72.2078.22					4 symmetric	2 left		
72.2078.23					4 symmetric	1 left, 1 right		
72.2078.24					1 left, 1 right	1 left		
72.2078.25					4 symmetric	1 right		
72.2078.26					4 symmetric	2 right		
72.2078.27					4 symmetric	1 left		
72.2078.29					1 left, 1 right	1 right		
72.2078.30					2 right			12/01
72.2078.31					2 left			12/01

globalgastroparts.com - szervizaruhaz.hu

WIDTH 1000 mm, FRONT SIDE, with BAKING OVEN (not valid for Marine)

Product No.	Service No.	Electric switches	Lamps	Lamps small	Gas switches	Piezo buttons	Remarks	Introd.
72.2078.40		2 left	2 left		2 right			
72.2078.41		1 right	1 right		2 left			
72.2078.42		2 right			2 left			
72.2078.43		1 left			1 right			
72.2078.44		2 left			2 right			
72.2078.45		1 right			1 left			
72.2078.46		2 right			2 left, 2 right			
72.2078.47		1 right			2 left, 1 right			
72.6923.01		1 right		1 right				10/01
72.6923.02		1 left		1 left				10/01
72.6923.03		2 symmetric		2 symmetric				10/01
72.6923.04		2 right		2 right				10/01
72.6923.05		2 left		2 left				10/01
72.6923.06		2 right, 1 left		2 right, 1 left				10/01
72.6923.07		1 right, 2 left		1 right, 2 left				10/01
72.6923.08		2 right, 2 left		2 right, 2 left				10/01
72.6923.11		2 symmetric	1 left	1 right				10/01
72.6923.12		2 Symmetric	1 right	1 left				10/01
72.6923.13		2 right, 1 left	1 left	2 right				10/01
72.6923.14		1 right, 2 left	1 right	2 left				10/01
72.6923.15		1 right, 2 left	2 left	1 right				10/01
72.6923.16		2 rignt, 1 left	2 right	1 left				10/01
72.6923.17		4 symmetric	2 left	2 right				10/01
72.6923.18		4 symmetric	2 right	2 left				10/01
72.6923.21		1 right, 1 left		1 right				10/01
72.6923.22		1 right, 1 left		1 left				10/01
72.6923.23		2 right, 1 left		2 right				10/01
72.6923.24		1 right, 2 left		2 left				10/01
72.6923.25		1 right, 2 left		1 right				10/01
72.6923.26		2 right, 1 left		1 left				10/01
72.6923.27		2 right, 2 left		2 right				10/01
72.6923.28		2 right, 2 left		2 left				10/01

globalgastroparts.com - szervizaruhaz.hu

WIDTH 1000 mm, HOT CABINET with sliding doors

Product No.	Service No.	Electric switches	Lamps	Gas switches	Piezo buttons	Remarks
72.2488.02		1 right	1 right			
72.2488.03		2 symmetric				
72.2488.04		1 left, 1 right	1 left, 1 right			
72.2488.05		4 symmetric				
72.2488.06		2 symmetric	1 left			
72.2488.07		4 symmetric	1 left			
72.2488.08		1 left	1 left			
72.2488.09		1 left				
72.2488.10		4 symmetric	1 right			
72.2488.11		1 left, 2 right	1 left, 2 right			
72.2488.12		2 symmetric	1 right			
72.2488.13		1 right				
72.2488.14		1 left, 2 right	1 left			
72.2488.15		4 symmetric	4 symmetric			
72.2488.16		2 left, 1 right	1 right			
72.2488.17		2 left, 1 right	2 left, 1 right			
72.2488.18		4 symmetric	2 right			
72.2488.20				4 symmetric		
72.2488.21				1 left, 1 right		
72.2488.22				1 left		
72.2488.23				1 right		
72.2488.24				4 symmetric	4 symmetric	
72.2488.25				1 left, 1 right	1 left	
72.2488.26				2 symmetric	1 right	
72.2488.40		1 left		1 right		
72.2488.41		1 right		1 left		
72.2488.42		1 left	1 left	2 right		
72.2488.43		1 right	1 right	2 left		
72.2488.44		1 left	1 left	2 right		Bain marie with drain cock
72.2488.45		1 right	1 right	2 left		Bain marie with drain cock
72.2488.46		1 left	1 left	2 right		
72.2488.47		1 left	1 left	2 right	2 right	
72.2488.48		1 left	1 left	1 right		
72.2488.49		1 right	1 right	1 left		
72.2488.50		2 left		2 right		

globalgastroparts.com - szervizaruhaz.hu

Baugruppe	unité	unità	unit	Large 72.3090.99
Frontblende	tôle frontale	lamiera frontale	front panel	9/19
Oberbau	partie supérieure	parte superiore	upper part	1.3.1996

WIDTH 1500 mm, with CUPBOARD or without LOWER PART

Product No.	Service No.	Electric switches	Lamps	Lamps small	Gas switches	Piezo buttons	Remarks	Introd.
72.2417.02		3 symmetric						
72.2417.03		3 symmetric	1 right					
72.2417.04		6 symmetric						
72.2417.05		6 symmetric	1 centre					
72.2417.06		1 left, 3 right	1 centre					
72.2417.07		3 left, 2 right	1 right					
72.2417.08		3 symmetric	1 right					
72.2417.09		1 centre, 1 right						
72.2417.10		2 left, 3 right	1 left, 1 centre, 2 right					
72.2417.11		3 left, 2 right	1 left, 1 right					
72.2417.12		3 symmetric	1 left					
72.2417.13		1 left, 1 centre						
72.2417.20					6 symmetric	1 left, 2 right		
72.2417.21					6 symmetric	2 right		
72.2417.22					2 left, 1 right			
72.2417.23					6 symmetric			
72.2417.24					6 symmetric	1 left, 1 right		
72.2417.25					2 left, 1 right	1 left		
72.2417.26					2 left, 1 right	1 right		
72.2417.27					2 left, 1 right	1 left		
72.2417.40		1 left, 1 centre			1 right			
72.2417.41		1 right, 1 centre			1 left			
72.6924.01		6 symmetric		3 right, 3 left				10/01
72.6924.02		1 right, 1 centre, 1 left		1 right, 1 centre, 1 left				10/01
72.6924.03		2 right, 3 left	1 right	1 right, 3 left				10/01
72.6924.04		1 right, 1 centre, 1 left	1 right	1 centre, 1 left				10/01
72.6924.05		1 right, 1 centre		1 right, 1 centre				10/01
72.6924.06		3 right, 2 left	1 left	3 right, 1 left				10/01
72.6924.07		1 right, 1 centre, 1 left	1 left	1 right, 1 centre				10/01
72.6924.08		1 centre, 1 left		1 centre, 1 left				10/01
72.6924.09		3 right, 2 left	2 right, 1 left	1 right, 1 left				10/01
72.6924.10		3 right, 1 left		1 right, 1 left				10/01
72.6924.11		1 right, 3 left		1 right, 3 left	2 right			10/01
72.6924.12		1 centre, 1 left		1 centre, 1 left	1 right			10/01
72.6924.13		3 right, 1 left		3 right, 1 left	2 left			10/01
72.6924.14		1 right, 1 centre, 1 left		1 centre, 1 left				10/01

globalgastroparts.com - szervizaruhaz.hu

Baugruppe	unité	unità	unit	Large 72.3090.99
Frontblende	tôle frontale	lamiera frontale	front panel	10/19
Oberbau	partie supérieure	parte superiore	upper part	1.3.1996

WIDTH 1500 mm, FRONT SIDE, BAKING OVEN (left), CUPBOARD (right)

Product No.	Service No.	Electric switches	Lamps	Lamps small	Gas switches	Piezo buttons	Remarks	Introd.
72.2984.02		3 symmetric						
72.2984.03		3 symmetric	1 right					
72.2984.04		6 symmetric						
72.2984.05		6 symmetric	1 centre					
72.2984.06		6 symmetric	1 left					
72.2984.07		1 left, 1 centre, 2 right	1 right					
72.2984.20		6 symmetric	1 left, 2 right					
72.2984.21		2 left	1 right					
72.2984.22		2 left, 1 right	1 right					
72.2984.23		2 left, 1 right	1 left					
72.2984.24		6 symmetric						
72.2984.40		3 left, 1 right			2 right			
72.2984.41		3 right, 1 left			2 left			
72.2984.42		1 centre, 1 right			1 left			
72.2984.43		1 centre, 1 left			1 right			
72.6931.01		6 symmetric		6 symmetric				10/01
72.6931.02		1 right, 1 centre, 1 left		1 right, 1 centre, 1 left				10/01
72.6931.03		2 right, 3 left	1 right	1 right, 3 left				10/01
72.6931.04		1 right, 1 centre, 1 left	1 right	1 centre, 1 left				10/01
72.6931.04		1 right, 1 centre, 1 left	1 right	1 centre, 1 left				10/01
72.6931.05		1 right, 1 centre		1 right, 1 centre				10/01
72.6931.06		3 right, 2 left	1 left	3 right, 1 left				10/01
72.6931.07		1 right, 1 centre, 1 left	1 left	1 right, 1 centre				10/01
72.6931.08		1 centre, 1 left		1 centre, 1 left				10/01
72.6931.11		1 right, 3 left		1 right, 3 left	2 right			10/01
72.6931.12		1 centre, 1 left		1 centre, 1 left	1 right			10/01
72.6931.13		3 right, 1 left		3 right, 1 left	2 left			10/01
72.6931.14		1 right, 1 centre, 1 left		1 right, 1 centre				10/01

globalgastroparts.com - szervizaruhaz.hu

F

Baugruppe	unité	unità	unit	Large 72.3090.99
Frontblende	tôle frontale	lamiera frontale	front panel	11/19
Oberbau	partie supérieure	parte superiore	upper part	1.3.1996

WIDTH 1500 mm, REAR SIDE, BAKING OVEN (left), CUPBOARD (right)

Product No.	Service No.	Electric switches	Lamps	Lamps small	Gas switches	Piezo buttons	Remarks	Introd.
72.2985.02		3 symmetric						
72.2985.03		3 symmetric	1 right					
72.2985.04		6 symmetric						
72.2985.05		6 symmetric	1 centre					
72.2985.06		1 centre, 1 right						
72.2985.20					2 left, 1 right			
72.2985.21					2 left, 1 right	1 left	Piezo but. extreme left	
72.2985.22					2 left, 1 right	1 left	Piezo but. between	
72.2985.40		3 left, 1 right			2 right			
72.2985.41		1 left, 3 right			2 left			
72.2985.42		1 left, 1 centre			1 right			
72.2985.43		1 right, 1 centre			1 left			
72.6932.01		6 symmetric		6 symmetric				10/01
72.6932.02		1 right, 1 centre, 1 left		1 right, 1 centre, 1 left				10/01
72.6932.03		2 right, 3 left	1 right	1 right, 3 left				10/01
72.6932.04		1 right, 1 centre, 1 left	1 right	1 centre, 1 left				10/01
72.6932.05		1 right, 1 centre		1 right, 1 centre				10/01
72.6932.06		3 right, 2 left	1 left	3 right, 1 left				10/01
72.6932.07		1 right, 1 centre, 1 left	1 left	1 right, 1 centre				10/01
72.6932.08		1 centre, 1 left		1 centre, 1 left				10/01
72.6932.11		1 right, 3 left		1 right, 3 left	2 right			10/01
72.6932.12		1 centre, 1 left		1 centre, 1 left	1 right			10/01
72.6932.13		3 right, 1 left		3 right, 1 left	2 left			10/01
72.6932.14		1 right, 1 centre, 1 left		1 right, 1 centre				10/01

globalgastroparts.com - szervizaruhaz.hu

Baugruppe	unité	unità	unit	Large 72.3090.99
Frontblende	tôle frontale	lamiera frontale	front panel	12/19
Oberbau	partie supérieure	parte superiore	upper part	1.3.1996

WIDTH 1500 mm, FRONT SIDE, TWO BAKING OVENS

Product No.	Service No.	Electric switches	Lamps	Lamps small	Gas switches	Piezo buttons	Remarks	Introd.
72.3322.02		3 symmetric						
72.3322.03		3 symmetric	1 right					
72.3322.04		6 symmetric						
72.3322.05		6 symmetric	1 centre					
72.3322.06		1 left, 1 centre						
72.3322.07		1 centre, 1 right						
72.3322.08		6 symmetric	2 right					
72.3322.09		3 left, 2 right	1 right					
72.3322.40		3 left, 1 right			2 right			
72.3322.41		1 left, 3 right			2 left			
72.3322.42		1 left, 2 symmetric	2 symmetric		1 right			
72.3322.60		6 symmetric						
72.3322.61		2 left, 1 right						
72.6929.01		6 symmetric		6 symmetric				10/01
72.6929.02		1 right, 1 centre, 1 left		1 right, 1 centre, 1 left				10/01
72.6929.03		2 right, 3 left	1 right	1 right, 3 left				10/01
72.6929.04		1 right, 1 centre, 1 left	1 right	1 centre, 1 left				10/01
72.6929.05		1 right, 1 centre		1 right, 1 centre				10/01
72.6929.06		3 right, 2 left	1 left	3 right, 1 left				10/01
72.6929.07		1 right, 1 centre, 1 left	1 left	1 right, 1 centre				10/01
72.6929.08		1 centre, 1 left		1 centre, 1 left				10/01
72.6929.11		1 right, 3 left		1 right, 3 left	2 right			10/01
72.6929.12		1 centre, 1 left		1 centre, 1 left	1 right			10/01
72.6929.13		3 right, 1 left		3 right, 1 left	2 left			10/01
72.6929.14		1 right, 1 centre, 1 left		1 right, 1 centre				10/01

globalgastroparts.com - szervizaruhaz.hu

Baugruppe	unité	unità	unit	Large 72.3090.99
Frontblende	tôle frontale	lamiera frontale	front panel	13/19
Oberbau	partie supérieure	parte superiore	upper part	1.3.1996

WIDTH 1500 mm, FRONT SIDE, TWO BAKING OVENS

WIDTH 1500 mm, REAR SIDE, TWO BAKING OVENS

Product No.	Service No.	Electric switches	Lamps	Lamps small	Gas switches	Piezo buttons	Remarks	Introd.
72.3323.02		3 symmetric						
72.3323.03		3 symmetric	1 right					
72.3323.04		6 symmetric						
72.3323.05		6 symmetric	1 centre					
72.3323.06		1 centre, 1 right						
72.3323.07		1 left, 1 centre						
72.3323.40		3 left, 1 right			2 right			
72.3323.41		1 left, 3 right			2 left			
72.3323.42		1 right			1 left			
72.3323.60					2 left, 1 right			
72.6930.01		6 symmetric		6 symmetric				10/01
72.6930.02		1 right, 1 centre, 1 left		1 right, 1 centre, 1 left				10/01
72.6930.03		2 right, 3 left	1 right	1 right, 3 left				10/01
72.6930.04		1 right, 1 centre, 1 left	1 right	1 centre, 1 left				10/01
72.6930.04		1 right, 1 centre, 1 left	1 right	1 centre, 1 left				10/01
72.6930.05		1 right, 1 centre		1 right, 1 centre				10/01
72.6930.06		3 right, 2 left	1 left	3 right, 1 left				10/01
72.6930.07		1 right, 1 centre, 1 left	1 left	1 right, 1 centre				10/01
72.6930.08		1 centre, 1 left		1 centre, 1 left				10/01
72.6930.11		1 right, 3 left		1 right, 3 left	2 right			10/01
72.6930.12		1 centre, 1 left		1 centre, 1 left	1 right			10/01
72.6930.13		3 right, 1 left		3 right, 1 left	2 left			10/01
72.6930.14		1 right, 1 centre, 1 left		1 right, 1 centre				10/01

globalgastroparts.com - szervizaruhaz.hu

Baugruppe	unité	unità	unit	Large 72.3090.99
Frontblende	tôle frontale	lamiera frontale	front panel	14/19
Oberbau	partie supérieure	parte superiore	upper part	1.3.1996

WIDTH 1500 mm, FRONT SIDE, HOT CABINET (left), BAKING OVEN (right)

Product No.	Service No.	Electric switches	Lamps	Lamps small	Gas switches	Piezo buttons	Remarks	Introd
72.3674.02		3 symmetric						
72.3674.03		3 symmetric	1 right					
72.3674.04		6 symmetric						
72.3674.05		6 symmetric	1 centre					
72.3674.20					2 left, 1 right	1 right		
72.3674.40		1 left, 1 centre			1 right,	1 right		
72.3674.41		1 left, 1 centre				1 right		
72.6927.01		6 symmetric		6 symmetric				10/01
72.6927.02		1 right, 1 centre, 1 left		1 right, 1 centre, 1 left				10/01
72.6927.03		2 right, 3 left	1 right	1 right, 3 left				10/01
72.6927.04		1 right, 1 centre, 1 left	1 right	1 centre, 1 left				10/01
72.6927.05		1 right, 1 centre		1 right, 1 centre				10/01
72.6927.06		3 right, 2 left	1 left	3 right, 1 left				10/01
72.6927.07		1 right, 1 centre, 1 left	1 left	1 right, 1 centre				10/01
72.6927.08		1 centre, 1 left		1 centre, 1 left				10/01
72.6927.11		1 right, 3 left		1 right, 3 left	2 right			10/01
72.6927.12		1 centre, 1 left		1 centre, 1 left	1 right			10/01
72.6927.13		3 right, 1 left		3 right, 1 left	2 left			10/01
72.6927.14		1 right, 1 centre, 1 left		2 right				10/01

globalgastroparts.com - szervizaruhaz.hu

Baugruppe	unité	unità	unit	Large 72.3090.99
Frontblende	tôle frontale	lamiera frontale	front panel	15/19
Oberbau	partie supérieure	parte superiore	upper part	1.3.1996

WIDTH 1500 mm, REAR SIDE, HOT CABINET (left), BAKING OVEN (right)

Product No.	Service No.	Electric switches	Lamps	Lamps small	Gas switches	Piezo buttons	Remarks	Introd.
72.3675.02		3 symmetric						
72.3675.03		3 symmetric	1 right					
72.3675.04		6 symmetric						
72.3675.05		6 symmetric	1 centre					
72.3675.20					2 left, 1 right	1 left		
72.3675.40		2 left, 2 symmetric			2 right			
72.3675.41		1 centre, 1 right			1 left	1 left		
72.3675.42		1 centre, 1 right				1 left		
72.6928.01		6 Symmetric		6 Symmetric				10/01
72.6928.02		1 right, 1 centre, 1 left		1 right, 1 centre, 1 left				10/01
72.6928.03		2 right, 3 left	1 right	1 right, 3 left				10/01
72.6928.04		1 right, 1 centre, 1 left	1 right	1 centre, 1 left				10/01
72.6928.05		1 right, 1 centre		1 right, 1 centre				10/01
72.6928.06		3 right, 2 left	1 left	3 right, 1 left				10/01
72.6928.07		1 right, 1 centre, 1 left	1 left	1 right, 1 centre				10/01
72.6928.08		1 centre, 1 left		1 centre, 1 left				10/01
72.6928.11		1 right, 3 left		1 right, 3 left	2 right			10/01
72.6928.12		1 centre, 1 left		1 centre, 1 left	1 right			10/01
72.6928.13		3 right, 1 left		3 right, 1 left	2 left			10/01
72.6928.14		1 right, 1 centre, 1 left		1 right, 1 centre				10/01

globalgastroparts.com - szervizaruhaz.hu

Baugruppe	unité	unità	unit	Large 72.3090.99
Frontblende	tôle frontale	lamiera frontale	front panel	16/19
Oberbau	partie supérieure	parte superiore	upper part	1.3.1996

WIDTH 1500 mm, FRONT SIDE, CUPBOARD (left), BAKING OVEN (right)

Product No.	Service No.	Electric switches	Lamps	Lamps small	Gas switches	Piezo buttons	Remarks	Introd.
72.3676.02		3 symmetric						
72.3676.03		3 symmetric	1 right					
72.3676.04		6 symmetric						
72.3676.05		6 symmetric	1 centre					
72.3676.06		1 centre, 1 right	1 right					
72.3676.40		2 left, 2 symmetric			2 right			
72.3676.41		2 right 2 symmetric			2 left			
72.3676.42		1 centre, 1 right			1 left			
72.3676.43		1 centre, 1 left			1 right			
72.3676.44		1 centre, 1 left			1 right	1 right		
72.6933.01		6 symmetric		6 symmetric				10/01
72.6933.02		1 right, 1 centre, 1 left		1 right, 1 centre, 1 left				10/01
72.6933.03		2 right, 3 left	1 right	1 right, 3 left				10/01
72.6933.04		1 right, 1 centre, 1 left	1 right	1 centre, 1 left				10/01
72.6933.05		1 right, 1 centre		1 right, 1 centre				10/01
72.6933.06		3 right, 2 left	1 left	3 right, 1 left				10/01
72.6933.07		1 right, 1 centre, 1 left	1 left	1 right, 1 centre				10/01
72.6933.08		1 centre, 1 left		1 centre, 1 left				10/01
72.6933.11		1 right, 3 left		1 right, 3 left	2 right			10/01
72.6933.12		1 centre, 1 left		1 centre, 1 left	1 right			10/01
72.6933.13		3 right, 1 left		3 right, 1 left	2 left			10/01
72.6933.14		1 right, 1 centre, 1 left		1 right, 1 centre				10/01

globalgastroparts.com - szervizaruhaz.hu

WIDTH 1500 mm, REAR SIDE, CUPBOARD (left), BAKING OVEN (right)

Product No.	Service No.	Electric switches	Lamps	Lamps small	Gas switches	Piezo buttons	Remarks	Introd.
72.3677.02		3 symmetric						
72.3677.03		3 symmetric	1 right					
72.3677.04		6 symmetric						
72.3677.05		6 symmetric	1 centre					
72.3677.06		1 centre						
72.3677.40		2 left, 2 symmetric			2 right			
72.3677.41		2 right 2 symmetric			2 left			
72.3677.42		1 centre, 1 left			1 right			
72.3677.43		1 centre, 1 right			1 left			
72.6934.01		6 symmetric		6 symmetric				10/01
72.6934.02		1 right, 1 centre, 1 left		1 right, 1 centre, 1 left				10/01
72.6934.03		2 right, 3 left	1 right	1 right, 3 left				10/01
72.6934.04		1 right, 1 centre, 1 left	1 right	1 centre, 1 left				10/01
72.6934.05		1 right, 1 centre		1 right, 1 centre				10/01
72.6934.06		3 right, 2 left	1 left	3 right, 1 left				10/01
72.6934.07		1 right, 1 centre, 1 left	1 left	1 right, 1 centre				10/01
72.6934.08		1 centre, 1 left		1 centre, 1 left				10/01
72.6934.11		1 right, 3 left		1 right, 3 left	2 right			10/01
72.6934.12		1 centre, 1 left		1 centre, 1 left	1 right			10/01
72.6934.13		3 right, 1 left		3 right, 1 left	2 left			10/01
72.6934.14		1 right, 1 centre, 1 left		1 right, 1 centre				10/01

WIDTH 1500 mm, HOT CABINET with sliding doors

Product No.	vice No.	Electric switches	Lamps	Gas switches	Piezo buttons	Remarks
72.3238.02		3 symmetric				
72.3238.03		3 symmetric	1 right			
72.3238.04		6 symmetric				
72.3238.05		6 symmetric	1 centre			
72.3238.06		left, 2 symmetric, 2 right	1 left			
72.3238.07		left, 1 centre, 2 right	2 right			
72.3238.08		1 left, 1 centre				
72.3238.09		3 symmetric,	1 left			
72.3238.10		1 centre, 1 left				
72.3238.20				6 symmetric	2 symmetric, 2 right	
72.3238.40		1 left		1 right		
72.3238.41		1 right		1 left		

globalgastroparts.com - szervizaruha

Product No.	Service No.			Breite, largeur, larghezza, width
72.4475		altezza 700 mm	height 700 mm	200 mm
72.3145		normale	normal	200 mm
72.4301		normale	normal	400 mm
72.4302		normale	normal	500 mm
72.4303		normale	normal	800 mm
72.4304		con forno davanti	with oven front	800 mm
72.4305		con forno dietro	with oven rear	800 mm
72.4306		normale	normal	1000 mm
72.4307		con forno davanti	with oven front	1000 mm
72.4308		con forno dietro	with oven rear	1000 mm
72.4310		normale	normal	1500 mm
72.4311		con forno sinistra e spazio aperto davanti	with oven left open compartment front	1500 mm
72.4312		con forno sinistra e spazio aperto dietro	with oven left open compartment rear	1500 mm
72.4313		con 2 forni davanti	with 2 ovens front	1500 mm
72.4314		con 2 forni dietro	with 2 ovens rear	1500 mm

globalgastroparts.com - szervizaruhaz.hu

		unità lamiera frontale parte superiore **senza buchi**	unit front panel upper part **without holes**	Large 72.3090.99 19/19 1.3.96
Product No.	Service No.			Breite, largeur, larghezza, width
72.4315		con forno destra e armadio riscald. davanti	with oven right and hot cupboard front	1500 mm
72.4316		con forno destra e armadio riscald. dietro	with oven right and hot cupboard rear	1500 mm
72.4317		con forno destra e spazio aperto davanti	with oven right open compartment front	1500 mm
72.4318		con forno destra e spazio aperto dietro	with oven right open compartment rear	1500 mm
72.4319		armadio riscald. porta glissante	hot cupboard sliding door	1500 mm

globalgastroparts.com - szervizaruhaz.hu

Blende oben
Bandeau supérieure
Copertura superiore
Upper filler

NORMAL(E)	MARINE	MARINE INDUCTION
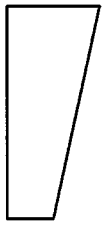	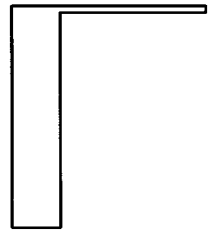	

	Erklärung	**explication**	**spiegazione**	**explanation**
B	Breite	largeur	larghezza	width
OK	ohne	sans	senza	without
	Konsolen für Herdstange	consoles pour tablette	mensole per corrimano	consoles for rod
MK	mit	avec	con	with
	Konsolen für Herdstange	consoles pour tablette	mensole per corrimano	consoles for rod
KR	Konsole für Herdstange rechts	console pour tablette droit	mensola per corrimano destra	console for rod right
KL	Konsole für Herdstange links	console pour tablette gauche	mensola per corrimano sinistra	console for rod left

	B (mm)	OK	MK	KR	KL
NORMAL(E)	200	72.3147	72.3149	72.3151	72.3153
	400	72.2466	72.2481	72.2476	72.2471
	500	72.2467	72.2482	72.2477	72.2472
	800	72.2468	72.2483	72.2478	72.2473
	1000	72.2469	72.2484	72.2479	72.2474
	1500	72.2470	72.2485	72.2490	72.2475
MARINE	200	72.4672	72.4676	72.4680	72.4684
	400	72.4673	72.4677	72.4681	72.4685
	500	72.4981	72.4982	72.4983	72.4984
	800	72.4674	72.4678	72.4682	72.4686
	1000	72.4985	72.4986	72.4987	72.4988
	1500	72.4675	72.4679	72.4683	72.4876
MARINE INDUCTION	500	72.4937	72.4938	72.4939	72.4940
	800	72.4878	72.4879	72.4880	72.4881
	1000	72.4951	72.4952	72.4953	72.4954

globalgastroparts.com - szervizaruhaz.hu

MARINE

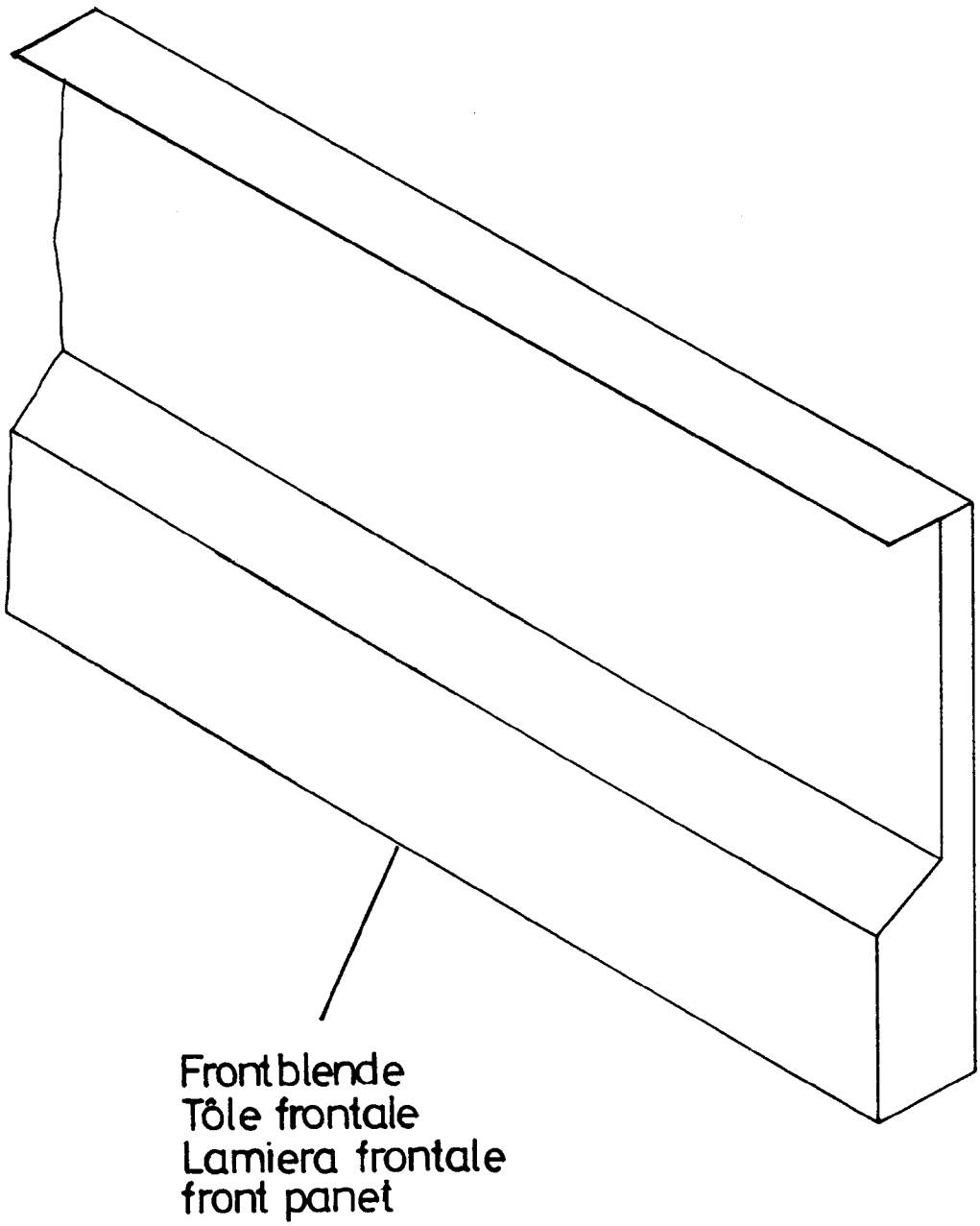

globalgastroparts.com - szervizaruhaz.hu

MARINE

Baugruppe	unité	unità	unit	Large 72.3090.100
Frontblende	tôle frontale	lamiera frontale	front panel	1/3
Oberbau	partie supérieure	parte superiore	upper part	09/97

BREITE/ LANGEUR/ LARGHEZZA/ WIDTH 500 mm,

Product No.	Service No.	MSe	MSb	GGe	INe	INb	IN	BMe	Kl	Kr	FJ
72.4970.01			X								
72.4970.02		X		X							
72.4970.03											
72.4970.04						X					
72.4970.05					X						
72.4970.06							X				
72.4970.07			X						X	X	
72.4970.08		X		X					X	X	
72.4970.09									X	X	
72.4970.10						X			X	X	
72.4970.11					X				X	X	
72.4970.12							X		X	X	
72.4970.13			X							X	
72.4970.14		X		X						X	
72.4970.15										X	
72.4970.16						X				X	
72.4970.17					X					X	
72.4970.18							X			X	
72.4970.19			X						X		
72.4970.20		X		X					X		
72.4970.21									X		
72.4970.22						X			X		
72.4970.23					X				X		
72.4970.24							X		X		
72.4970.25											X
72.4970.26									X	X	X
72.4970.27										X	X
72.4970.28									X		X

globalgastroparts.com - szervizaruhaz.hu

MARINE

Baugruppe	unité	unità	unit	Large 72.3090.100
Frontblende	tôle frontale	lamiera frontale	front panel	2/3
Oberbau	partie supérieure	parte superiore	upper part	09/97

BREITE/ LANGEUR/ LARGHEZZA/ WIDTH 800 mm,

Product No.	Service No.	OS	BMe	Kl	Kr
72.4971.01			X		
72.4971.02		X			
72.4971.03			X	X	X
72.4971.04		X		X	X
72.4971.05			X		X
72.4971.06		X			X
72.4971.07			X	X	
72.4971.08		X		X	

	Erklärungen	Explications	Definizioni	Explanations
MSe	Monosupertherm Platte, einseitig bedienbar	Plaque Supertherm, utilisable d'un côté	Placca Supertherm. comando da un lato	Supertherm plate, operated from one side
MSeDA	Monosupertherm Platte, einseitig bedienbar mit Deckplattenablauf	Plaque Supertherm, ôutilisable d'un côté avec écoulement plaque couvrante	Placca Supertherm. comando da un lato con scarico placca di copertura	Supertherm plate, operated from one side with cover drain
MSb	Monosupertherm Platte, beidseitig bedienbar	Plaque Supertherm, utilisable des deux côtés	Placca Supertherm. comando da due lati	Supertherm plate, operated from both sides
GGe	Grill/Griddle Platte, einseitig bedienbar	Plaque de grill/grillade lisse, utilisable d'un côté	Placca per griglia/placca lisca, comando da un lato	Grill/griddle plate, operated from one side
INe	Induktionsherd, einseitig bedienbar	Fourneau à induction, utilisable d'un côté	Cucina ad induzione, comando da un lato	Induction range, operated from one side
INb	Induktionsherd, beidseitig bedienbar	Fourneau à induction, utilisable des deux côtés	Cucina ad induzione, comando da due lati	Induction range, operated from both sides
IN	Induktionsherd, ohne Schalter	Fourneau à induction, sans interrupteur	Cucina ad induzione, senza interruttore	Induction range, without switch
BMe	Bain-Marie, einseitig bedienbar	Bain-marie, utilisable d'un côté	Bagnomaria, comando da un lato	Bain marie, operated from one side
OS	Frontblende ohne Schalter	Tôle frontale sans interrupteur	Lamiera frontale senza interruttore	Front panel without switch
KO	Ohne Konsole für Herdstange	Sans console pour tablette	Senza mensola per corrimano	Without console for rod
Klr	Konsole für Herdstange, beidseitig	Console pour tablette, deux côtés	Mensola per corrimano, due lati	Console for rod, both sides
Kl	Konsole für Herdstange, links	Console pour tablette, gauche	Mensola per corrimano, sinistra	Console for rod, left
Kr	Konsole für Herdstange, rechts	Console pour tablette, droit	Mensola per corrimano, destra	Console for rod, right
FJ	Juno Friteuse	friteuse Juno	friggitrice Juno	Juno deep fat fryer

globalgastroparts.com - szervizaruhaz.hu

MARINE

Baugruppe	unité	unità	unit	Large 72.3090.100
Frontblende	tôle frontale	lamiera frontale	front panel	3/3
Oberbau	partie supérieure	parte superiore	upper part	09/97

BREITE/ LANGEUR/ LARGHEZZA/ WIDTH 1000 mm,

Product No.	Service No.	MSe	MSeDA	MSb	GGe	INe	INb	IN	BMe	KI	Kr	Introduction
72.4972.01				X								
72.4972.02		X			X							
72.4972.03												
72.4972.04							X					
72.4972.05						X						
72.4972.06								X				
72.4972.07				X						X	X	
72.4972.08		X			X					X	X	
72.4972.09										X	X	
72.4972.10							X			X	X	
72.4972.11						X				X	X	
72.4972.12								X		X	X	
72.4972.13				X							X	
72.4972.14		X			X						X	
72.4972.15											X	
72.4972.16							X				X	
72.4972.17						X					X	
72.4972.18								X			X	
72.4972.19				X						X		
72.4972.20		X			X					X		
72.4972.21										X		
72.4972.22							X			X		
72.4972.23						X				X		
72.4972.24								X		X		
72.6433			X									07.00
72.6434			X									07.00

globalgastroparts.com - szervizaruhaz.hu

Baugruppe	unité	unità	unit	Large 72.3090.100a
Frontblende	tôle frontale	lamiera frontale	front panel	1
Oberbau	partie supérieure	parte superiore	upper part	03/01

Wand montiert	wall mounted	
Gerätebreite	width of appliance	200
Grätehöhe	height of appliance	400

Appliance	KO	KIr	Kr	KI
blind OS	72.6491.01	72.6491.02	72.6491.03	72.6491.04

Standgerät	floor mounting	
Gerätebreite	width of appliance	200
Grätehöhe	height of appliance	700

Appliance	KO	KIr	Kr	KI
blind OS	72.5147.01	72.5147.02	723.5147.03	72.5147.04

Standgerät	floor mounting	
Gerätebreite	width of appliance	500
Grätehöhe	height of appliance	700

Appliance	KO	KIr	Kr	KI
Supertherm MS(E) 92 Large Cooking Plate ALEX	72.6328.01	72.6328.02	72.6328.03	72.6328.04
Supertherm MS(E) 92 Large Cooking Plate with 2 knobs + vent. openings	72.6328.17	72.6328.18	72.6328.19	72.6328.20
Supertherm MS(E) 92 Large Cooking Plate with 2 knobs, lamp + vent. openings	72.6328.21	72.6328.22	72.6328.23	72.6328.24
Induction hob with 2 knobs + vent. openings	72.6328.17	72.6328.18	72.6328.19	72.6328.20
Induction hob with 2 knobs, lamp + vent. openings	72.6328.21	72.6328.22	72.6328.23	72.6328.24
Induction hob+wok with 2 knobs + vent. openings	72.6328.17	72.6328.18	72.6328.19	72.6328.20
Induction hob+wok with 2 knobs, lamp + vent. openings	72.6328.21	72.6328.22	72.6328.23	72.6328.24
Bain-marie with knob	72.6328.37	72.6328.38	72.6328.39	72.6328.40
Bain-marie with knob and lamp	72.6328.41	72.6328.42	72.6328.43	72.6328.44
Pasta cooker with 2 knobs and lamp	72.6328.05	72.6328.06	72.6328.07	72.6328.08
Grill/griddle plate ALEX	72.6328.01	72.6328.02	72.6328.03	72.6328.04
Grill/griddle plate with 2 knobs	72.6328.05	72.6328.06	72.6328.07	72.6328.08
Grill/griddle plate with 2 knobs and 2 lamps	72.6328.09	72.6328.10	72.6328.11	72.6328.12
Deep fat fryer with knob and 2 lamps	72.6328.13	72.6328.14	72.6328.15	72.6328.16

globalgastroparts.com - szervizaruhaz.hu

Wandgerät	wall mounting	
Gerätebreite	width of appliance	500
Grätehöhe	height of appliance	400

Appliance	KO	KIr	Kr	KI
Supertherm MS(E) 92 Large Cooking Plate ALEX	72.6493.01	72.6493.02	72.6493.03	72.6493.04
Supertherm MS(E) 92 Large Cooking Plate with 2 knobs + vent. openings	72.6493.17	72.6493.18	72.6493.19	72.6493.20
Supertherm MS(E) 92 Large Cooking Plate with 2 knobs, lamp + vent. openings	72.6493.21	72.6493.22	72.6493.23	72.6493.24
Induction hob with 2 knobs + vent. openings	72.6493.17	72.6493.18	72.6493.19	72.6493.20
Induction hob with 2 knobs, lamp + vent. openings	72.6493.21	72.6493.22	72.6493.23	72.6493.24
Induction hob+wok with 2 knobs + vent. openings	72.6493.17	72.6493.18	72.6493.19	72.6493.20
Induction hob+wok with 2 knobs, lamp + vent. openings	72.6493.21	72.6493.22	72.6493.23	72.6493.24
Bain-marie with knob	72.6493.37	72.6493.38	72.6493.39	72.6493.40
Bain-marie with knob and lamp	72.6493.41	72.6493.42	72.6493.43	72.6493.44
Pasta cooker with 2 knobs and lamp	72.6493.05	72.6493.06	72.6493.07	72.6493.08
Grill/griddle plate ALEX	72.6493.01	72.6493.02	72.6493.03	72.6493.04
Grill/griddle plate with knob	72.6493.05	72.6493.06	72.6493.07	72.6493.08
Grill/griddle plate with 2 knobs and 2 lamps	72.6493.09	72.6493.10	72.6493.11	72.6493.12
Deep fat fryer with knob and 2 lamps	72.6493.13	72.6493.14	72.6493.15	72.6493.16

Standgerät	floor mounting	
Gerätebreite	width of appliance	800
Grätehöhe	height of appliance	700

Appliance	KO	KIr	Kr	KI
Bain marie ALEX	72.6329.01	72.6329.02	72.6329.03	72.6329.04
Bain marie with knob	72.6329.05	72.6329.06	72.6329.07	72.6329.08
Bain-Marie with knob and lamp	72.6329.09	72.6329.10	72.6329.11	72.6329.12

globalgastroparts.com - szervizaruhaz.hu

MARINE

Baugruppe	unité	unità	unit	Large 72.3090.100a
Frontblende	tôle frontale	lamiera frontale	front panel	3
Oberbau	partie supérieure	parte superiore	upper part	03/01

Wandgerät	wall mounting	
Gerätebreite	width of appliance	800
Grätehöhe	height of appliance	400

Appliance	KO	KIr	Kr	KI
Bain marie ALEX	72.6757.01	72.6757.02	72.6757.03	72.6757.04
Bain marie with knob	72.6757.05	72.6757.06	72.6757.07	72.6757.08
Bain-Marie with knob and lamp	72.6757.09	72.6757.10	72.6757.11	72.6757.12

Standgerät	floor mounting	
Gerätebreite	width of appliance	1000
Grätehöhe	height of appliance	700

Appliance	KO	KIr	Kr	KI
Supertherm MS(E) 94 Large Cooking Plate ALEX	72.6331.01	72.6331.02	72.6331.03	72.6331.04
Supertherm MS(E) 94 Large Cooking Plate with 4 knobs + vent. openings	72.6331.17	72.6331.18	72.6331.19	72.6331.20
Supertherm MS(E) 94 Large Cooking Plate with 4 knobs, lamp + vent. openings	72.6331.21	72.6331.22	72.6331.23	72.6331.24
Supertherm MS(E) 94 Large Cooking Plate with 4 knobs, 4 lamps + vent. openings	72.6331.25	72.6331.26	72.6331.27	72.6331.28
Induction hob with 4 knobs + vent. openings	72.6331.17	72.6331.18	72.6331.19	72.6331.20
Induction hob with 4 knobs, lamp + vent. openings	72.6331.21	72.6331.22	72.6331.23	72.6331.24
Induction hob with 4 knobs, 4 lamps + vent. openings	72.6331.25	72.6331.26	72.6331.27	72.6331.28
Grill/griddle plate ALEX	72.6331.01	72.6331.02	72.6331.03	72.6331.04
Grill/griddle plate with 4 knobs	72.6331.05	72.6331.06	72.6331.07	72.6331.08
Grill/griddle plate with 4 knobs and 4 lamps	72.6331.13	72.6331.14	72.6331.15	72.6331.16
Deep fat fryer 2x18 l with knobs and lamps	72.6331.13	72.6331.14	72.6331.15	72.6331.16

globalgastroparts.com - szervizaruhaz.hu

MARINE

Baugruppe	unité	unità	unit	Large 72.3090.100a
Frontblende	tôle frontale	lamiera frontale	front panel	4
Oberbau	partie supérieure	parte superiore	upper part	03/01

Wandgerät	wall mounted	
Gerätebreite	width of appliance	1000
Grätehöhe	height of appliance	400

Appliance	KO	Klr	Kr	Kl
Supertherm MS(E) 94 Large Cooking Plate ALEX	72.6492.01	72.6492.02	72.6492.03	72.6492.04
Supertherm MS(E) 94 Large Cooking Plate with 4 knobs + vent. openings	72.6492.17	72.6492.18	72.6492.19	72.6492.20
Supertherm MS(E) 94 Large Cooking Plate with 4 knobs, lamp + vent. openings	72.6492.21	72.6492.22	72.6492.23	72.6492.24
Supertherm MS(E) 94 Large Cooking Plate with 4 knobs, 4 lamps + vent. openings	72.6492.25	72.6492.26	72.6492.27	72.6492.28
Induction hob with 4 knobs + vent. openings	72.6492.17	72.6492.18	72.6492.19	72.6492.20
Induction hob with 4 knobs, lamp + vent. openings	72.6492.21	72.6492.22	72.6492.23	72.6492.24
Induction hob with 4 knobs, 4 lamps + vent. openings	72.6492.25	72.6492.26	72.6492.27	72.6492.28
Grill/griddle plate ALEX	72.6492.01	72.6492.02	72.6492.03	72.6492.04
Grill/griddle plate with 4 knobs	72.6492.05	72.6492.06	72.6492.07	72.6492.08
Grill/griddle plate with 4 knobs and 4 lamps	72.6492.13	72.6492.14	72.6492.15	72.6492.16
Deep fat fryer 2x18 l with knobs and lamps	72.6492.13	72.6492.14	72.6492.15	72.6492.16

globalgastroparts.com - szervizaruhaz.hu

Baugruppe	unité	unità	unit	Large 72.3090.100a
Frontblende	tôle frontale	lamiera frontale	front panel	4
Oberbau	partie supérieure	parte superiore	upper part	03/01

Standgerät mit Backofen	floor mounting with oven			
Gerätebreite	width of appliance	1000		
Grätehöhe	height of appliance	700		

Appliance	KO	KIr	Kr	Kl
Supertherm MS(E) 94 Large Cooking Plate ALEX	72.6409.01	72.6409.02	72.6409.03	72.6409.04
Supertherm MS(E) 94 Large Cooking Plate with 4 knobs + vent. openings	72.6409.17	72.6409.18	72.6409.19	72.6409.20
Supertherm MS(E) 94 Large Cooking Plate with 4 knobs, lamp + vent. openings	72.6409.21	72.6409.22	72.6409.23	72.6409.24
Supertherm MS(E) 94 Large Cooking Plate with 4 knobs, 4 lamps + vent. openings	72.6409.25	72.6409.26	72.6409.27	72.6409.28
Grill/griddle plate ALEX	72.6409.01	72.6409.02	72.6409.03	72.6409.04
Grill/griddle plate with 4 knobs	72.6409.05	72.6409.06	72.6409.07	72.6409.08
Grill/griddle plate with 4 knobs and 4 lamps	72.6409.13	72.6409.14	72.6409.15	72.6409.16

Standgerät mit 2 Backöfen	floor mounting with 2 ovens			
Gerätebreite	width of appliance	1500		
Grätehöhe	height of appliance	700		

Appliance	KO	KIr	Kr	Kl
Supertherm MS(E) 96 Large Cooking Plate ALEX	72.6330.01	72.6330.02	72.6330.03	72.6330.04
Supertherm MS(E) 96 Large Cooking Plate with 6 knobs + vent. openings	72.6330.05	72.6330.06	72.6330.07	72.6330.08
Supertherm MS(E) 96 Large Cooking Plate with 6 knobs, lamp + vent. openings	72.6330.09	72.6330.10	72.6330.11	72.6330.12

Wandgerät	wall mounting			
Gerätebreite	width of appliance	1500		
Grätehöhe	height of appliance	400		

Appliance	KO	KIr	Kr	Kl
Supertherm MS(E) 96 Large Cooking Plate ALEX	72.6792.01	72.6792.02	72.6792.03	72.6792.04
Supertherm MS(E) 96 Large Cooking Plate with 6 knobs + vent. openings	72.6792.05	72.6792.06	72.6792.07	72.6792.08
Supertherm MS(E) 96 Large Cooking Plate with 6 knobs, lamp + vent. openings	72.6792.09	72.6792.10	72.6792.11	72.6792.12

globalgastroparts.com - szervizaruhaz.hu

MARINE

Baugruppe	unité	unità	unit	Large 72.3090.100a
Frontblende	tôle frontale	lamiera frontale	front panel	5
Oberbau	partie supérieure	parte superiore	upper part	03/01

Standgerät mit Abstellraum	floor mounting with compartment	
Gerätebreite	width of appliance	1500
Grätehöhe	height of appliance	700

Appliance	KO	KIr	Kr	KI
Supertherm MS(E) 96 Large Cooking Plate ALEX	72.6840.01	72.6840.02	72.6840.03	72.6840.04
Supertherm MS(E) 96 Large Cooking Plate with 6 knobs + vent. openings	72.6840.05	72.6840.06	72.6840.07	72.6840.08
Supertherm MS(E) 96 Large Cooking Plate with 6 knobs, lamp + vent. openings	72.6840.09	72.6840.10	72.6840.11	72.6840.12

globalgastroparts.com - szervizaruhaz.hu

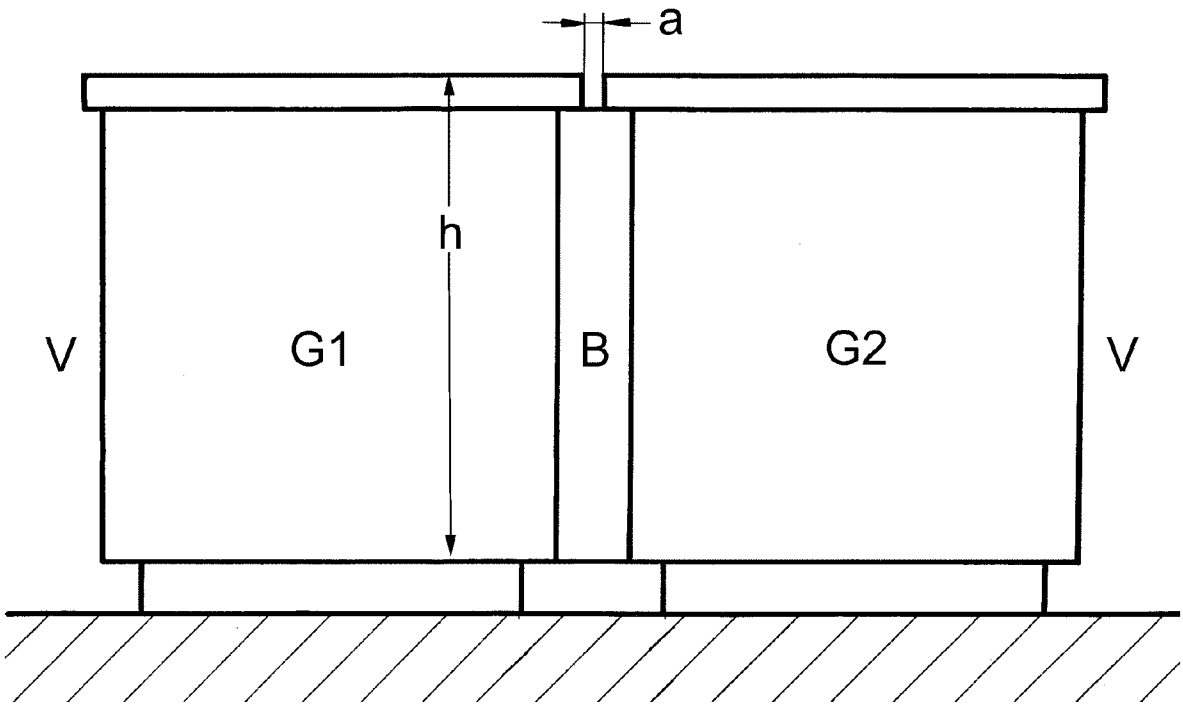

	Erklärung	**explication**	**spiegazione**	**explanation**
B	Blende	bandeau	copertura	filler
G1	Gerät auf linker Seite	appareil à côté gauche	apparecchio a sinistra	appliance on the left
G2	Gerät auf rechter Seite	appareil à côté droite	apparecchio a destra	appliance on the right
V	Vorderseite	avant	parte frontale	front
h	Gerätehöhe mm	hauteur d'appareil mm	altezza dell'apparecchio mm	appliance hight mm
a	Abstand mm	distance mm	distanza mm	distance mm
SK	Standkochkessel	marmite fixe	pentola	stationary boiling pan
KA	Kippapparat	appareil basculant	apparecchio ribaltabile	tilting appliance
HE	Herd	fourneau	cucina	range
ZT	Zwischentisch	table intermédiaire	tavolo intermedio	centre-spreader

globalgastroparts.com - szervizanyag.hu

DE	FR	IT	GB	72.3090.200 01/99
Baugruppe	**Unité**	**Unità**	**Unit**	Seite/page/pagina/page
Blende B Geräte Rücken an Rücken	**Bandeau B Appareils dos à dos**	**Copertura B Apparechi schiena a schiena**	**Filler B Appliances back to back**	1

G1	G2	h	a	B
KA	KA	800	0	76.1128.03
KA	SK	800	0	76.1299.01
KA	HE	800	0	76.1300.01
HE	KA	800	0	76.1301.01
KA	ZT	800	0	76.1128.02
ZT	KA	800	0	76.1128.02
SK	SK	800	0	76.5425.01
SK	KA	800	0	76.1299.01
SK	HE	800	0	76.5426.01
HE	SK	800	0	76.5426.01
SK	ZT	800	0	76.5426.05
ZT	SK	800	0	76.5426.05
KA	KA	800	10	76.1128.07
KA	SK	800	10	76.1299.02
KA	HE	800	10	76.1300.02
HE	KA	800	10	76.1301.02
KA	ZT	800	10	76.1128.09
ZT	KA	800	10	76.1128.09
SK	SK	800	10	76.5425.02
SK	KA	800	10	76.1299.02
SK	HE	800	10	76.5426.02
HE	SK	800	10	76.5426.02
SK	ZT	800	10	76.5426.06
ZT	SK	800	10	76.5426.06
KA	KA	700	0	76.1128.06
KA	SK	700	0	76.1299.03
KA	HE	700	0	76.1300.03
HE	KA	700	0	76.1301.03
KA	ZT	700	0	76.1128.05
ZT	KA	700	0	76.1128.05
SK	SK	700	0	76.5425.03
SK	KA	700	0	76.1299.03
SK	HE	700	0	76.5426.03
HE	SK	700	0	76.5426.03
SK	ZT	700	0	76.5426.07
ZT	SK	700	0	76.5426.07
KA	KA	700	10	76.1128.08
KA	SK	700	10	76.1299.04
KA	HE	700	10	76.1300.04
HE	KA	700	10	76.1301.04
KA	ZT	700	10	76.1128.10
ZT	KA	700	10	76.1128.10
SK	SK	700	10	76.5425.04
SK	KA	700	10	76.1299.04
SK	HE	700	10	76.5426.04
HE	SK	700	10	76.5426.04
SK	ZT	700	10	76.5426.08
ZT	SK	700	10	76.5426.08

globalgastroparts.com - szervizaru

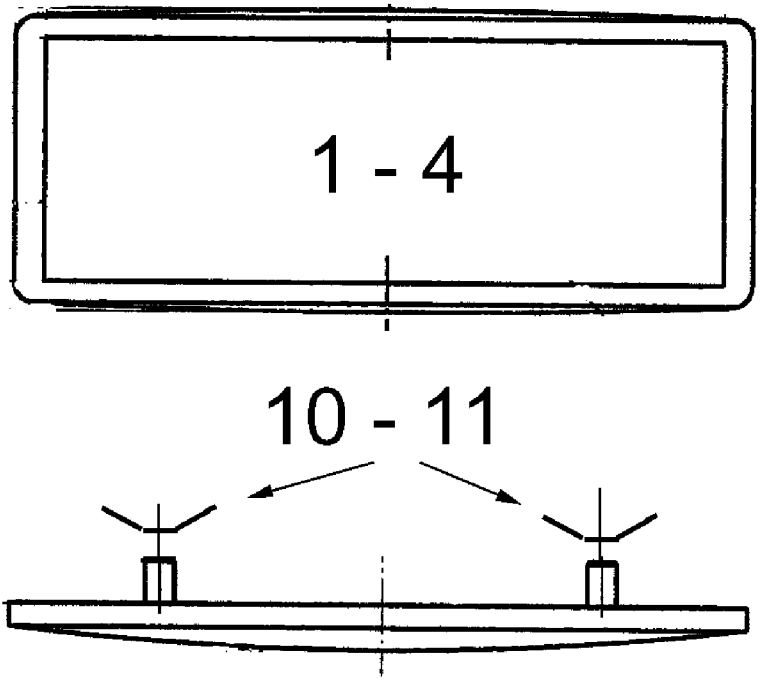

globalgastroparts.com - szervizaruhaz.hu

			unità	unit		72.3090.250
			placchetta	label		1
						10.00

Pos.	Produkt Nr.	Service Nr.	designatione	designation		
1	72.2252		THERMA			1
2	72.6384		THERMALINE			1
3	76.3177		JUNOLINE			1
4	1201 2031		ELECTROLUX			1
10	1701 5072		anello di sostegno	retaining ring	Pos. 1÷3	2
11	1201 2032		anello di sostegno	retaining ring	Pos. 4	2

globalgastroparts.com - szervizaruhaz.h

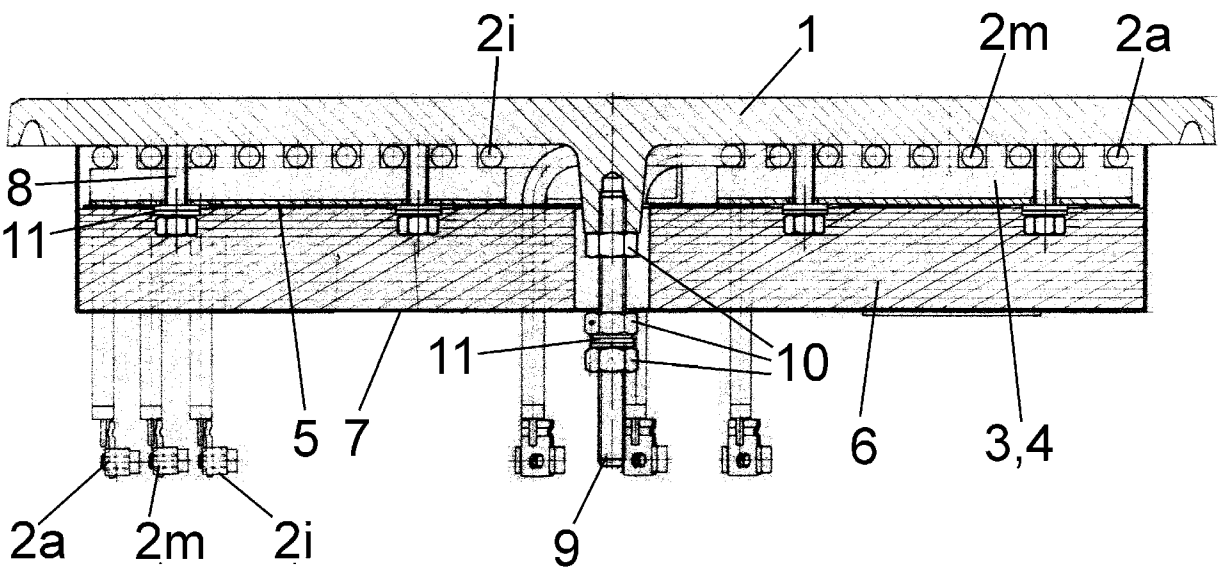

globalgastroparts.com - szervizaruhaz.hu

			unità piastra monopentola	unit individual plate	4 kW		72.3090.260 1 05.02
Pos.	Produkt Nr.	Service Nr.	designatione	designation			
1	702 014 006.03		piastra	cooking plate			1
2a	72.0484.22		riscaldamento	heating	1.505 kW	400V	1
	72.0484.23		riscaldamento	heating	1.505 kW	415V	1
	72.0484.24		riscaldamento	heating	1.505 kW	440V	1
2m	72.0484.12		riscaldamento	heating	1.335 kW	400V	1
	72.0484.13		riscaldamento	heating	1.335 kW	415V	1
	72.0484.14		riscaldamento	heating	1.335 kW	440V	1
2i	72.0484.02		riscaldamento	heating	1.160 kW	400V	1
	72.0484.03		riscaldamento	heating	1.160 kW	415V	1
	72.0484.04		riscaldamento	heating	1.160 kW	440V	1
3	72.0251.01		supporto di riscaldam.	heating element support			1
4	72.0251.02		supporto di riscaldam.	heating element support			3
5	72.0355		lamiera rifrattiva	heat deflector plate			1
6	72.0350		isolamento	insulation			1
7	72.0356		rivestimento	paneling			1
8	1701 2516		vite	screw	M6x25		8
9	72.0343.01		spina con filetto	threaded pin	M8x100		1
10	1701 3044		dado	nut	M8x0,8D		3
11	1701 3544		rosetta elastica	tension disk	M6		16